DIAGNOSING
Network Failures

WITH KEITH PERKINS

WTI
WORLDPAC Training Institute

TST
SEMINARS

Network Failures & Diagnosis

“What we have here, is a failure to communicate!”

Course Outline

Defining what a network is

Outline common network design and architecture

Cover useful tools for network diagnosis

Outline a diagnostic process

Cover wiring diagram interpretation and understanding

Outline common network failures

What’s In an OBD2 Port?

An OBD-II compliant network can use any of the five COMMON communication protocols:
J1850 PWM – Typically Ford
J1850 VPW – Typically GM
ISO9141-2 – Typically Chrysler, Euro, and Asian vehicles
ISO14230-4 (AKA KWP 2000) - Typically Chrysler, Euro, and Asian vehicles
ISO15765-4/SAE J2480 (A “type" of CAN)

As of model year 2008 to Present, MOST vehicles will use the CAN protocol. (ISO15765-4)

There are two types of diagnostic link connectors (DLCs) defined by SAE J1962 - Type A and Type B

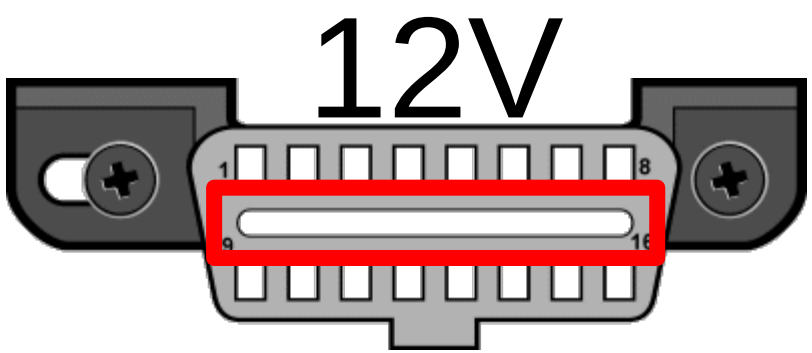

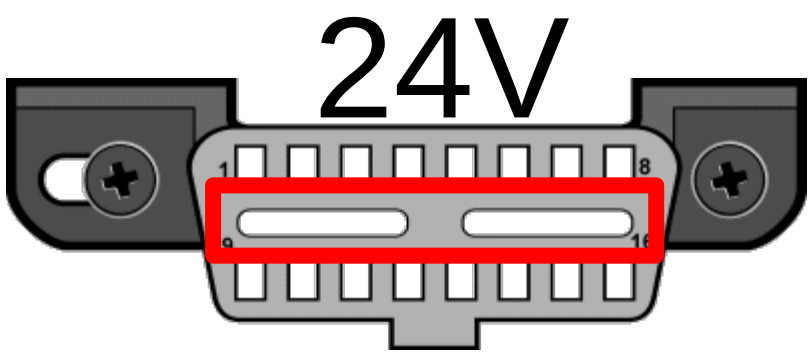

What is in a vehicle?

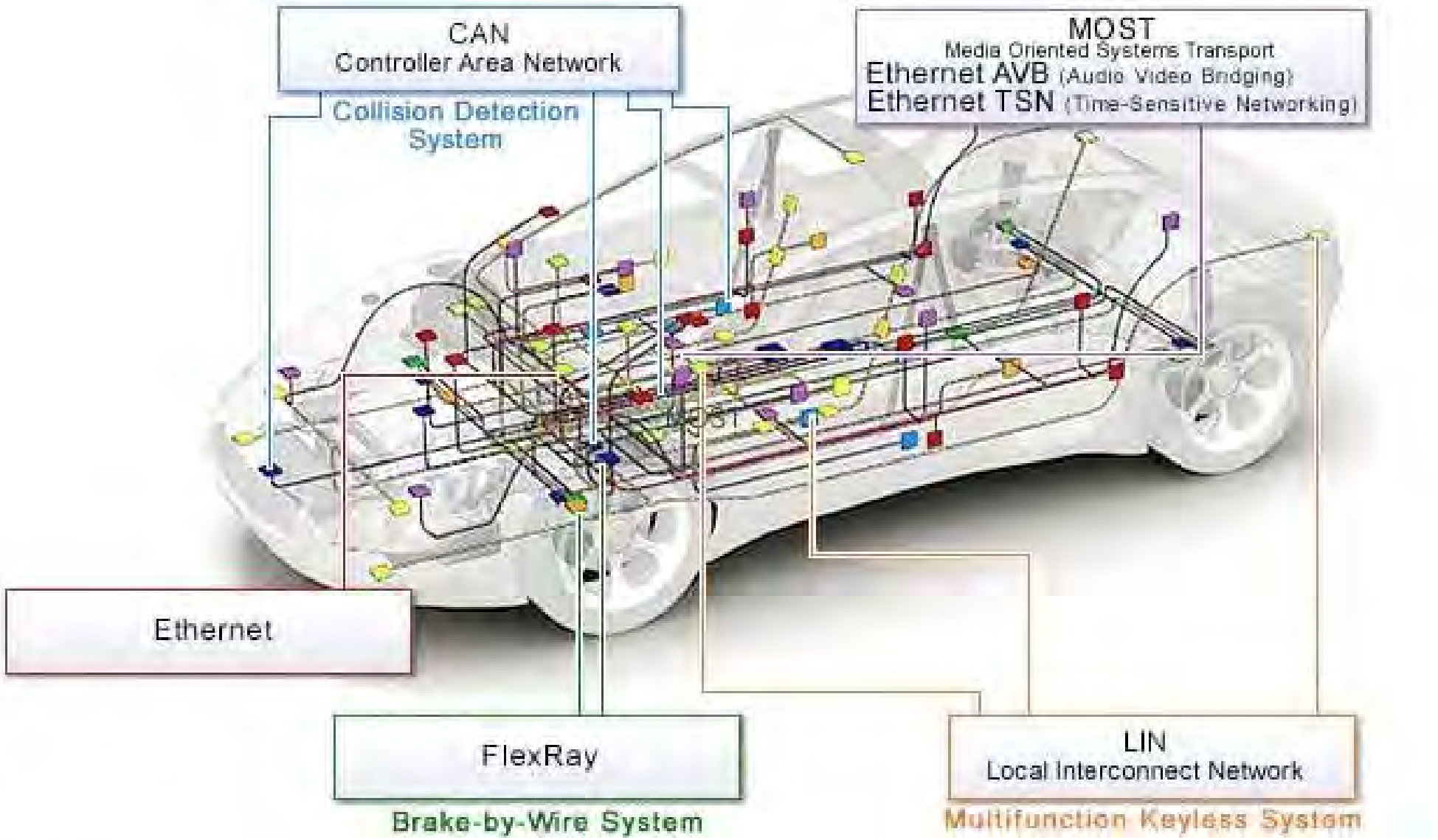

Gateways (Generic BMW)

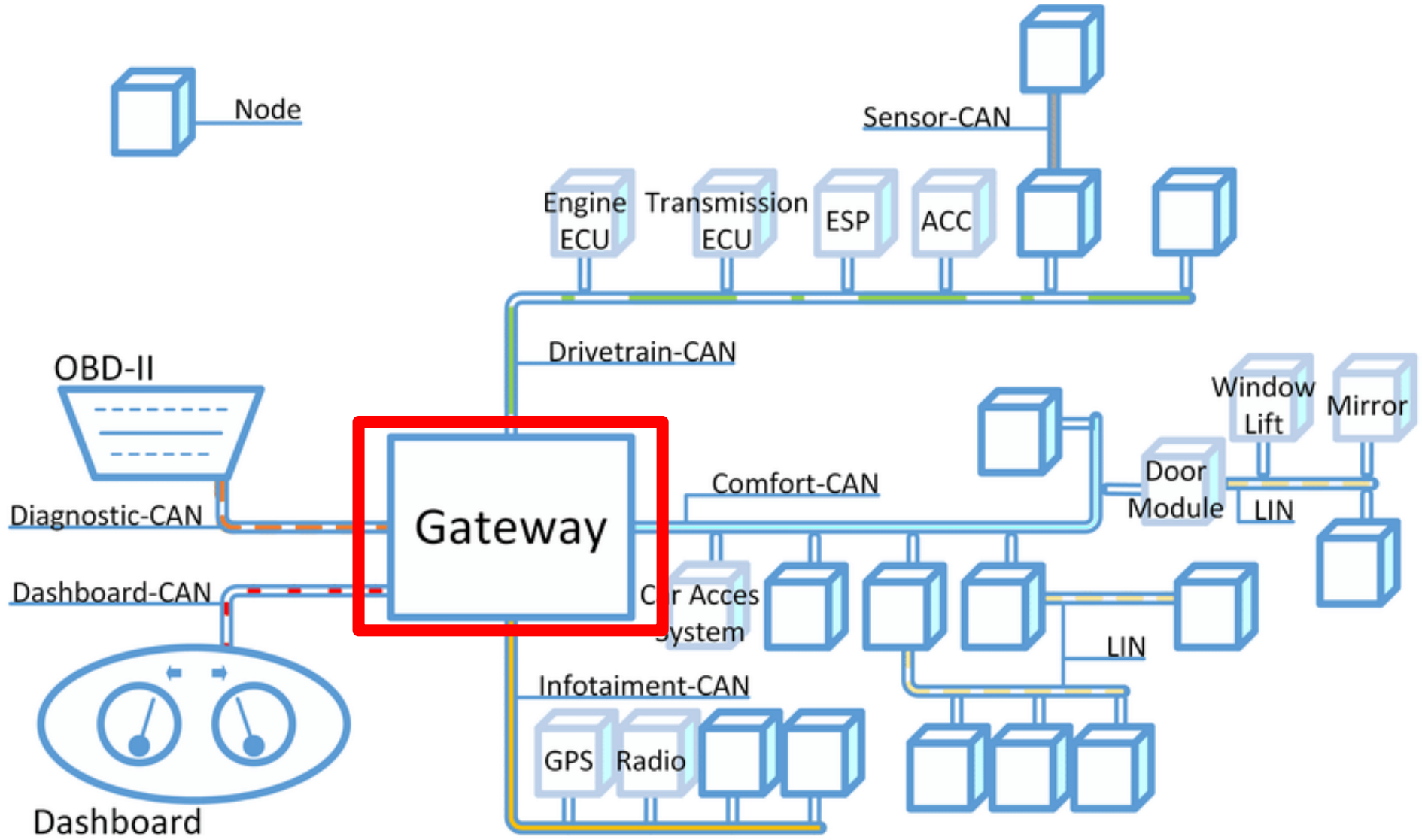

Gateways (2021 Nissan Sentra)

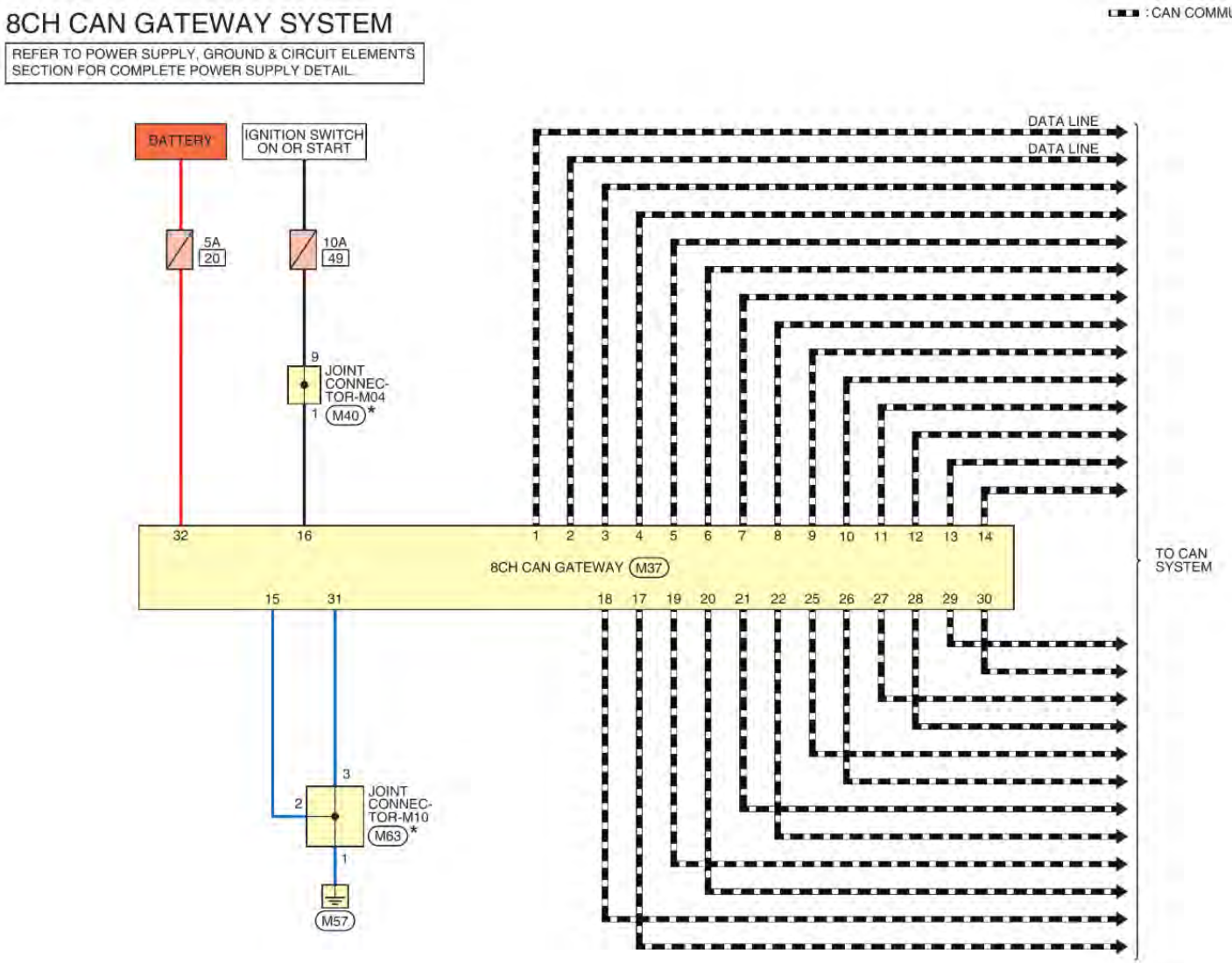

Gateway Access:

Physical Security

Digital Security

Physical Access is the weak point!

Gateways (Chrysler)

“This module functions as a secure firewall that protects external access to the vehicle via the radio and diagnostic connector from the rest of the vehicle network.“

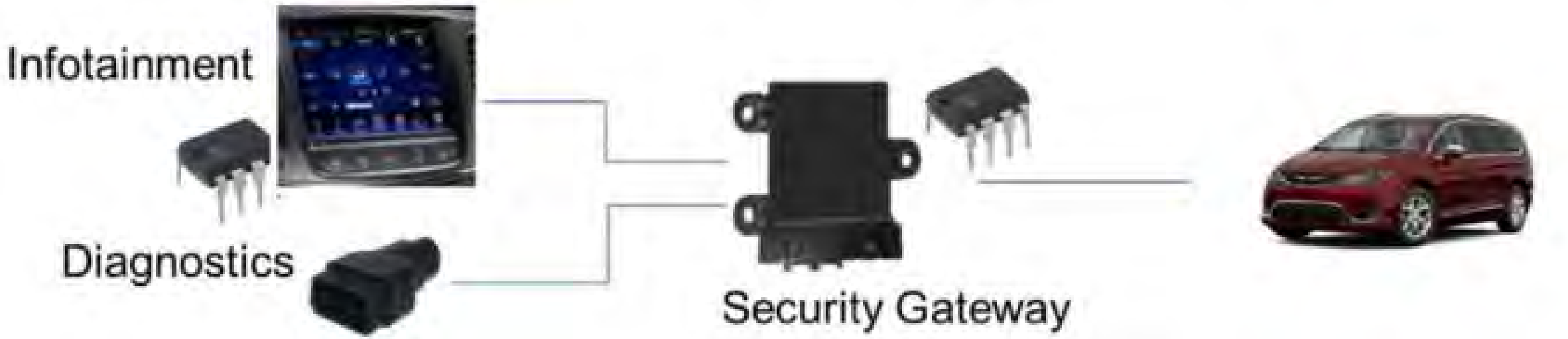

CAN Type Networks!

CAN:

A Controller Area Network (CAN bus) is a message-based protocol. For each device the data in a packet is transmitted sequentially but in such a way that if more than one device transmits at the same time the highest priority device can continue while the others back off. Packets are received by all devices, including by the transmitting device.

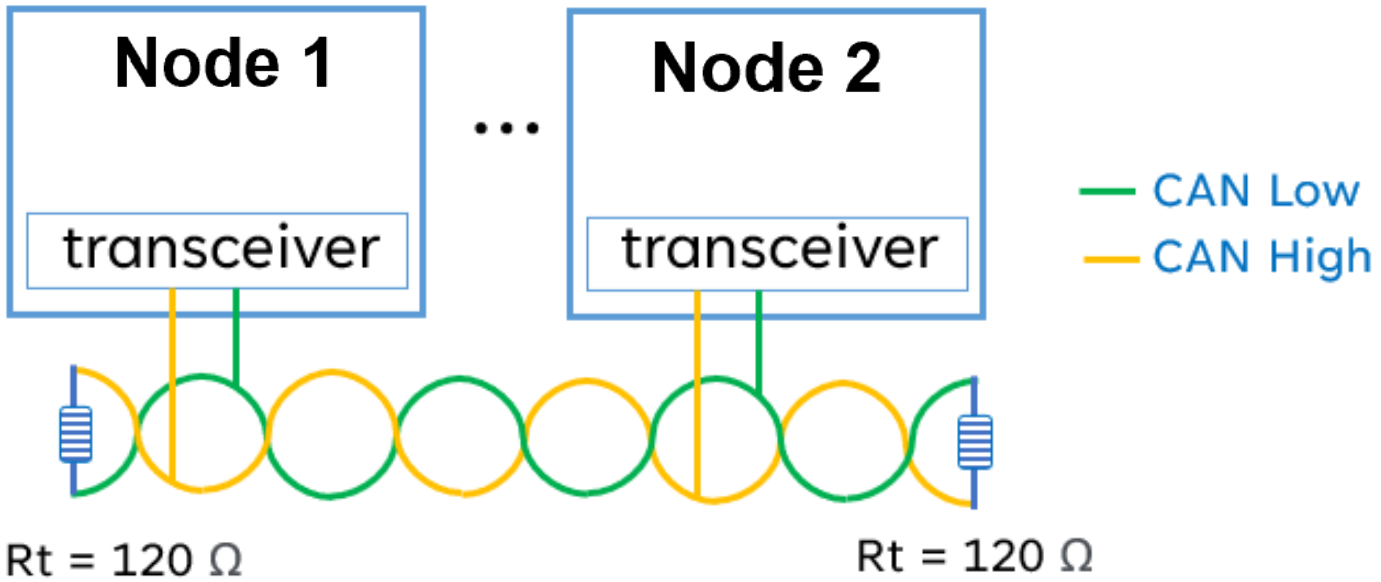

CAN Design

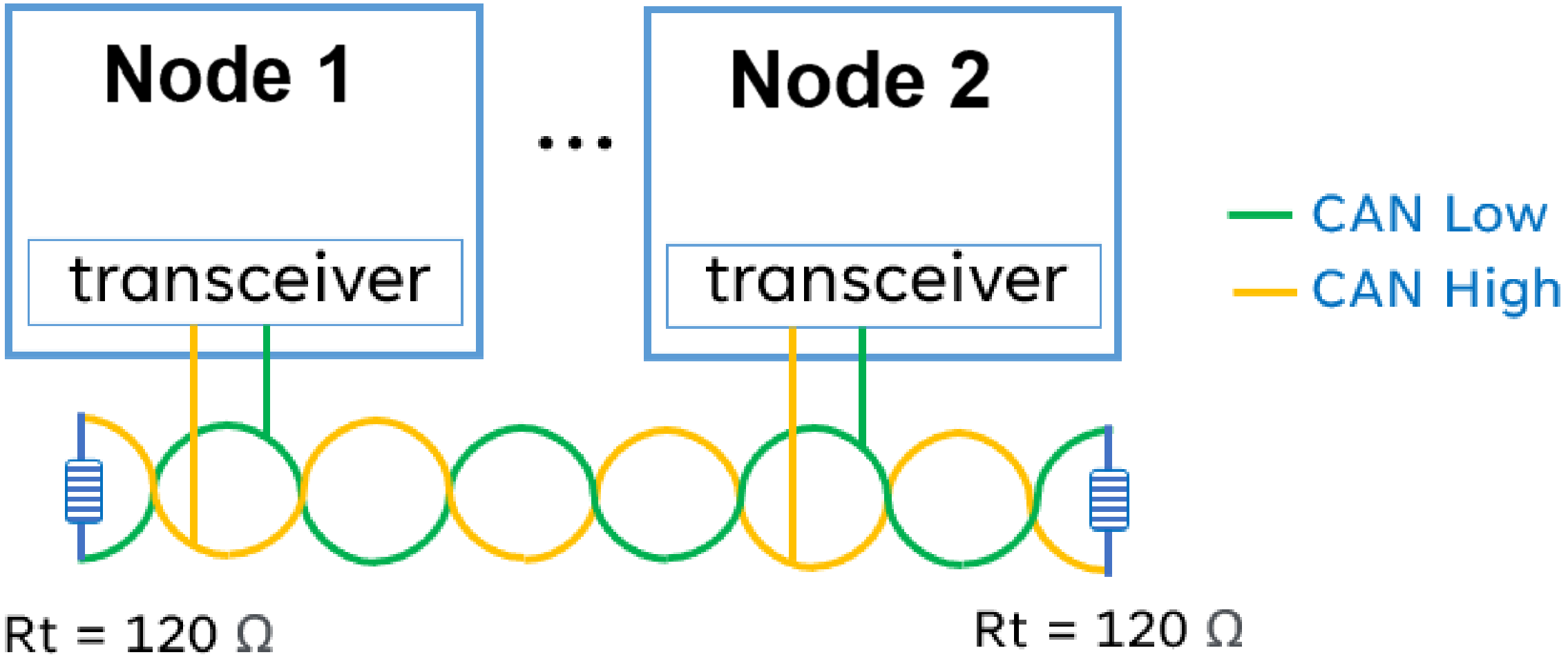
Node 1
transceiver
Node 2
transceiver
CAN Low
CAN High
Rt = 120 Ω
Rt = 120 Ω

Common CAN Network Architectures

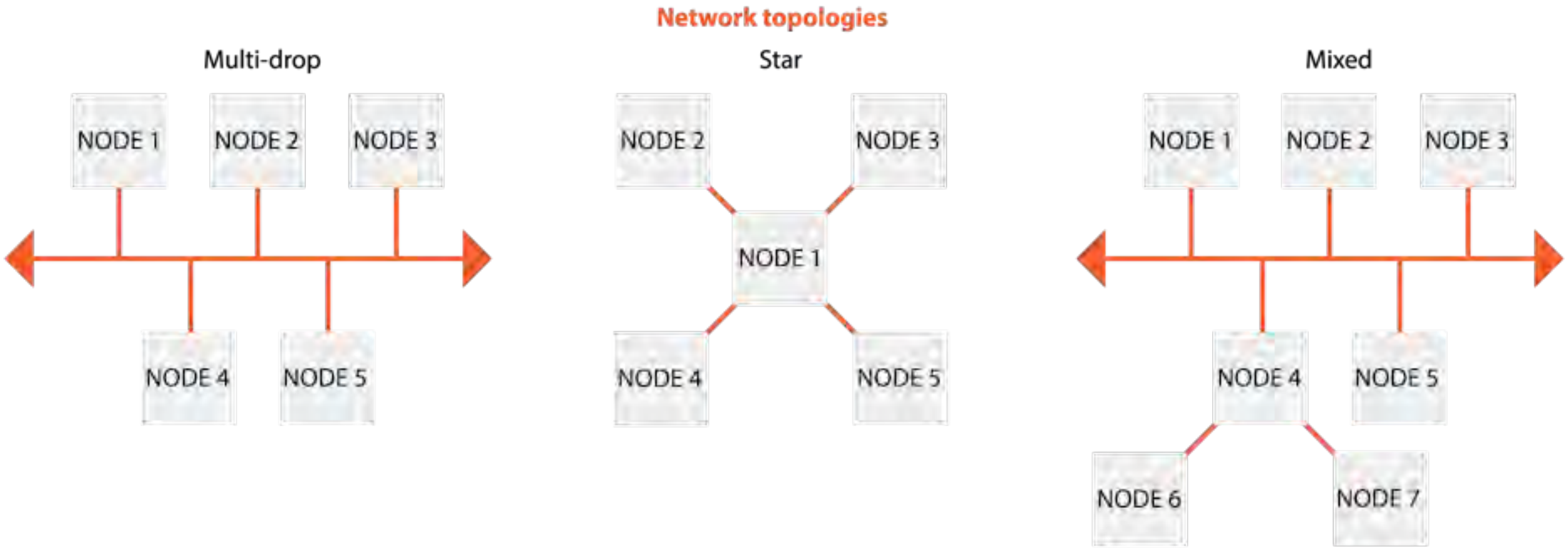

Mixed CAN Network Architectures (Toyota)

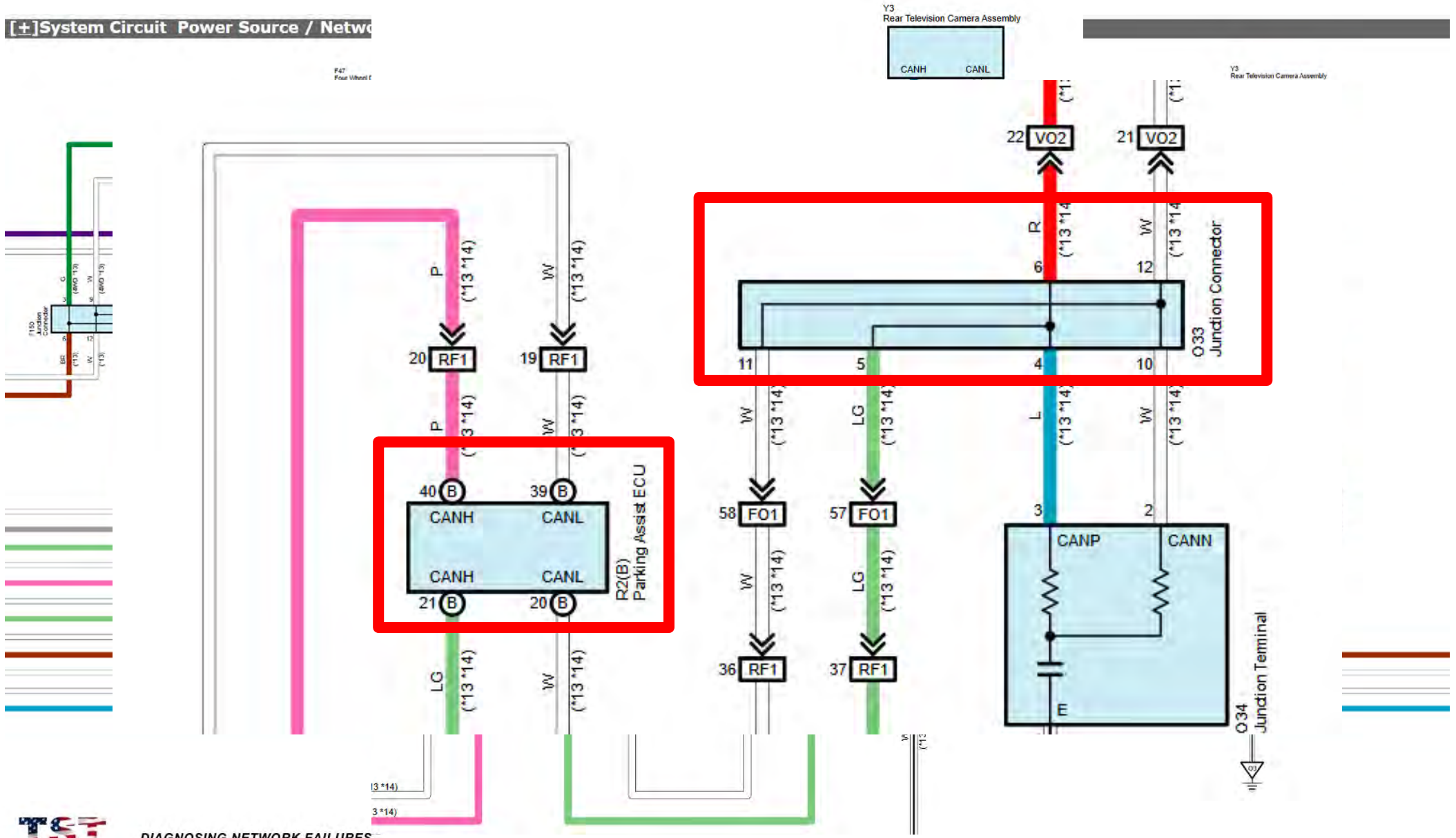

CAN Bus Architecture Premises

- **Decentralized/peer-to-peer topology:** All ECUs (Electronic Control Units) on the CAN bus are equal — there is no master.

- **Every node can transmit:** Any module (ECU) can initiate communication if the bus is idle.

- **Message-based arbitration:** Priority is determined by message ID, not by module hierarchy.

What is transferred over the wire(s)?

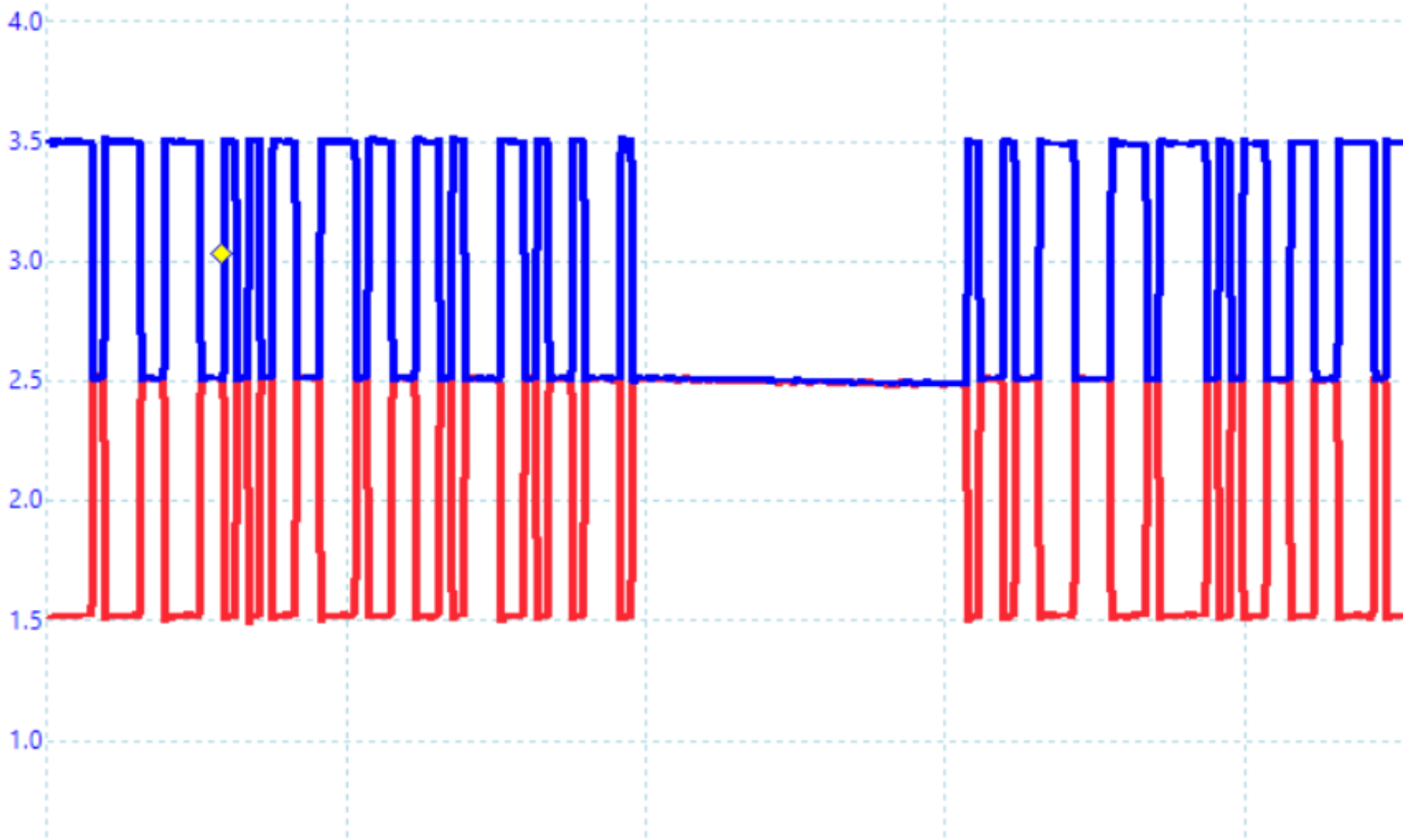

FIRST! How is a message created?

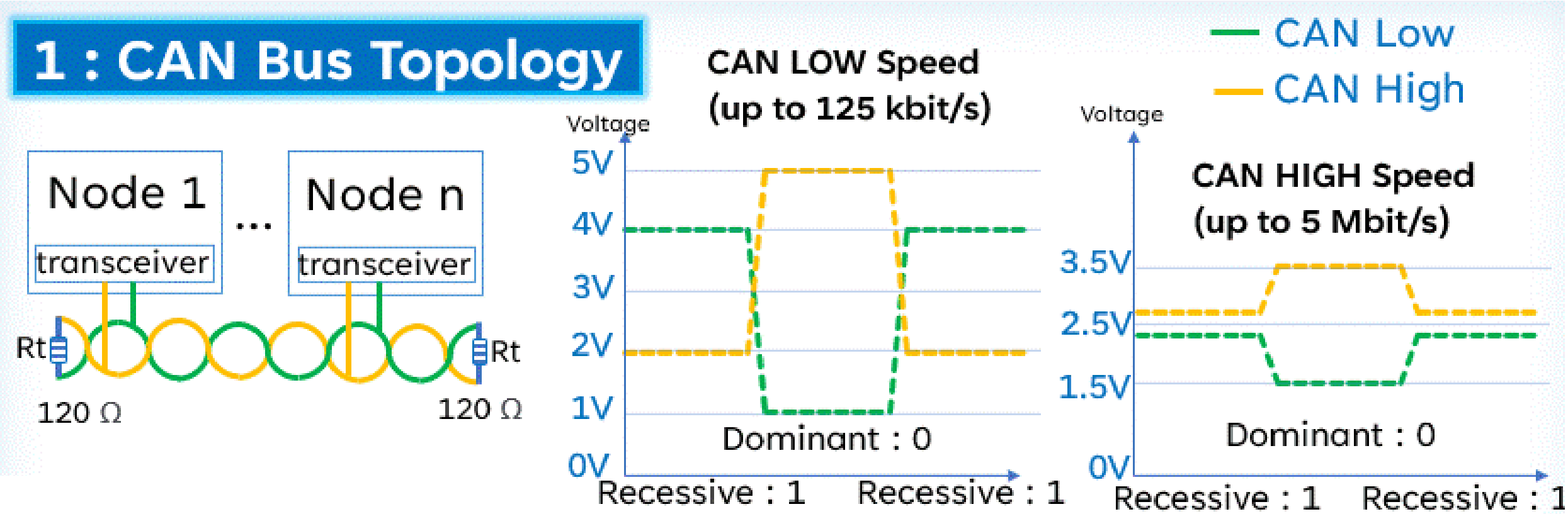

What is in a Message?

2 : Frame

	SOF	Arbitration	Control	Data	CRC	ACK	EOF
In bits	1	12 or 32	6	0 to 64	16	2	7

Start **O**f **F**rame
Always a 0

Control : Includes DLC (Data Length Code)

CRC : Error (Data corruption) detection

End **O**f **F**rame

Who Gets to Talk?

3 : Arbitration

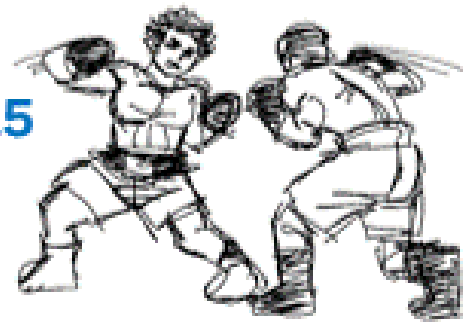

Node 15

Node 16

The node with the **lowest ID** has the **highest priority**

Start Bit	ID BITS 10	9	8	7	6	5	4
0	0	0	0	0	0	0	0
0	0	0	0	0	0	0	1
0	0	0	0	0	0	0	0

Who can Hear it?

4 : Msg filtering

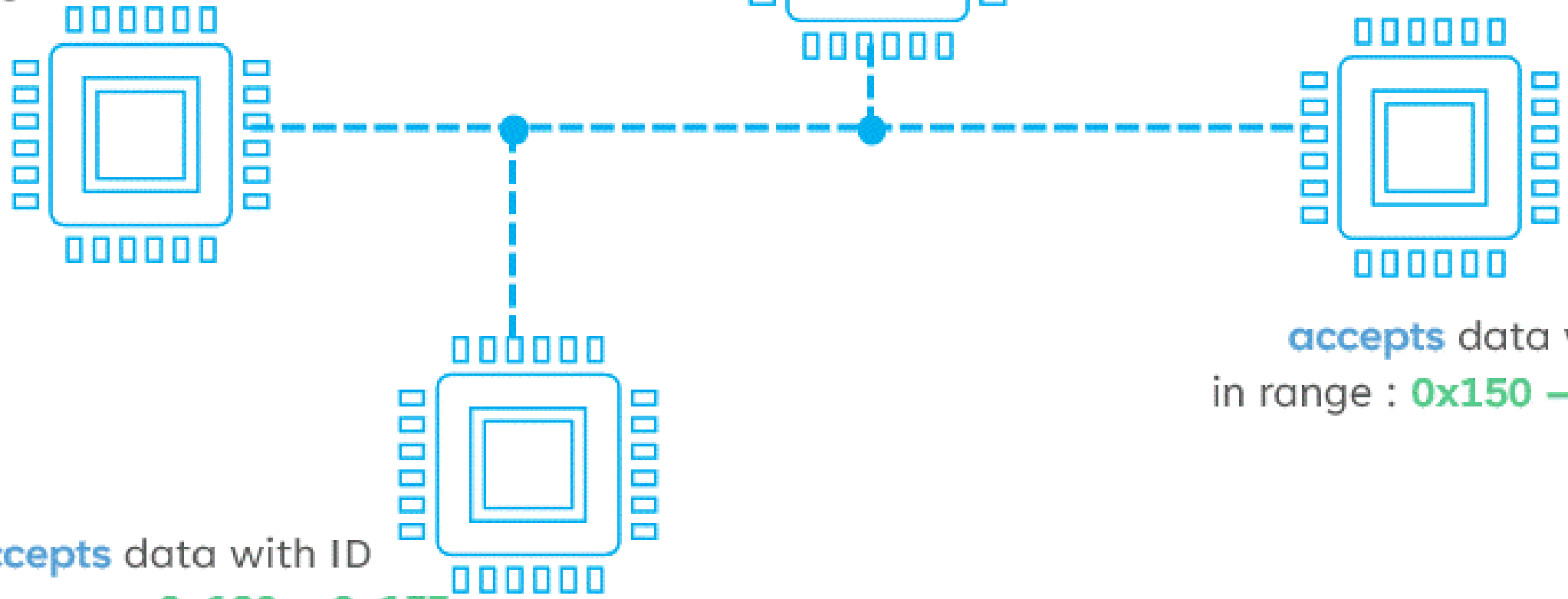

What Makes that Message Happen?

A **CAN transceiver** is the physical interface between:

- The **CAN controller** (inside an MCU or external chip)
- The **physical bus wires** (CAN_H and CAN_L)

It doesn't create the *message content* — it **drives the electrical signal** that physically places bits on the bus.

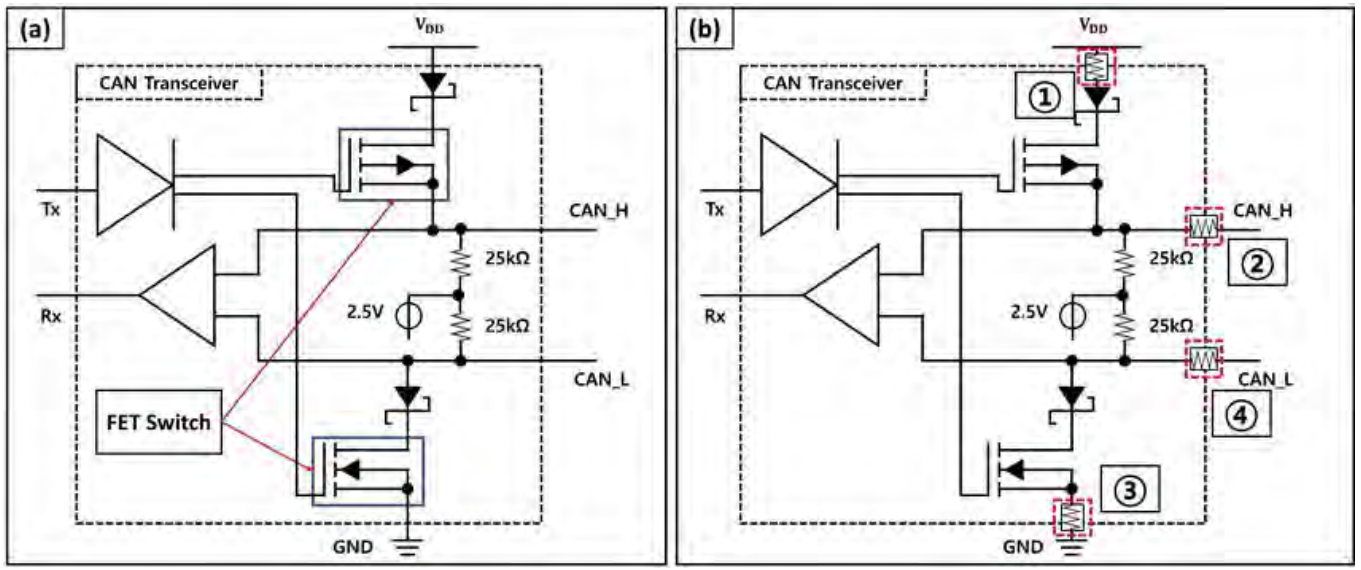

What Makes that Message Happen?

Input Data

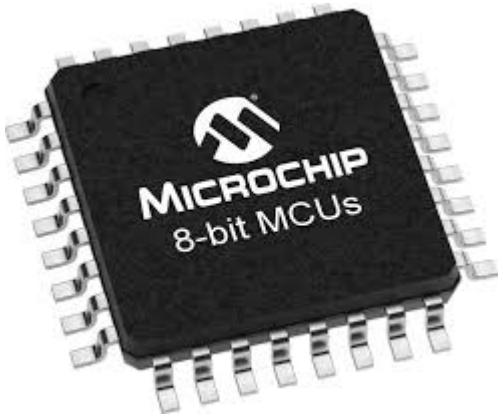

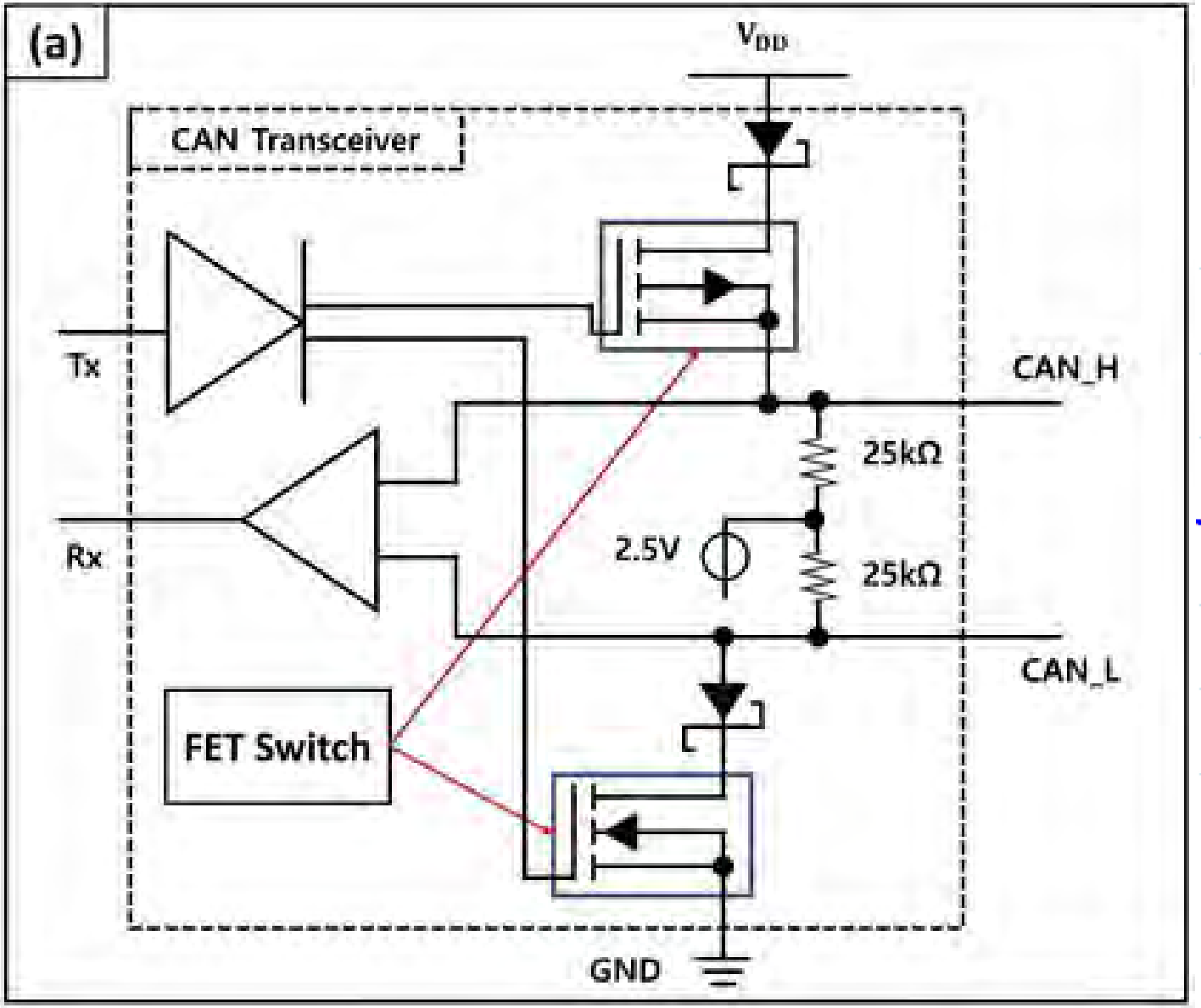

Output Data

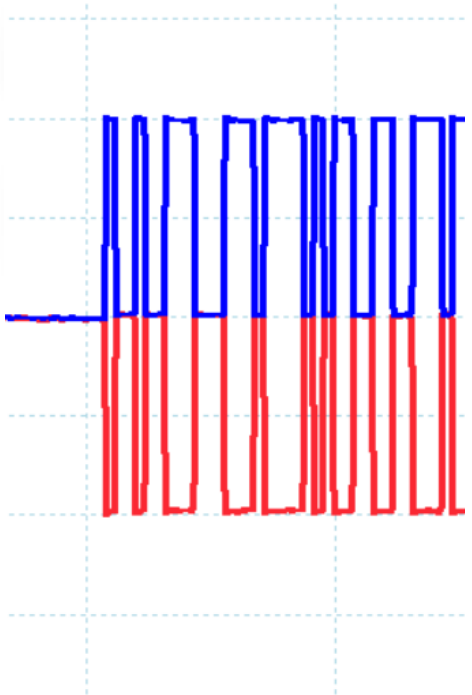

What is a transferred?

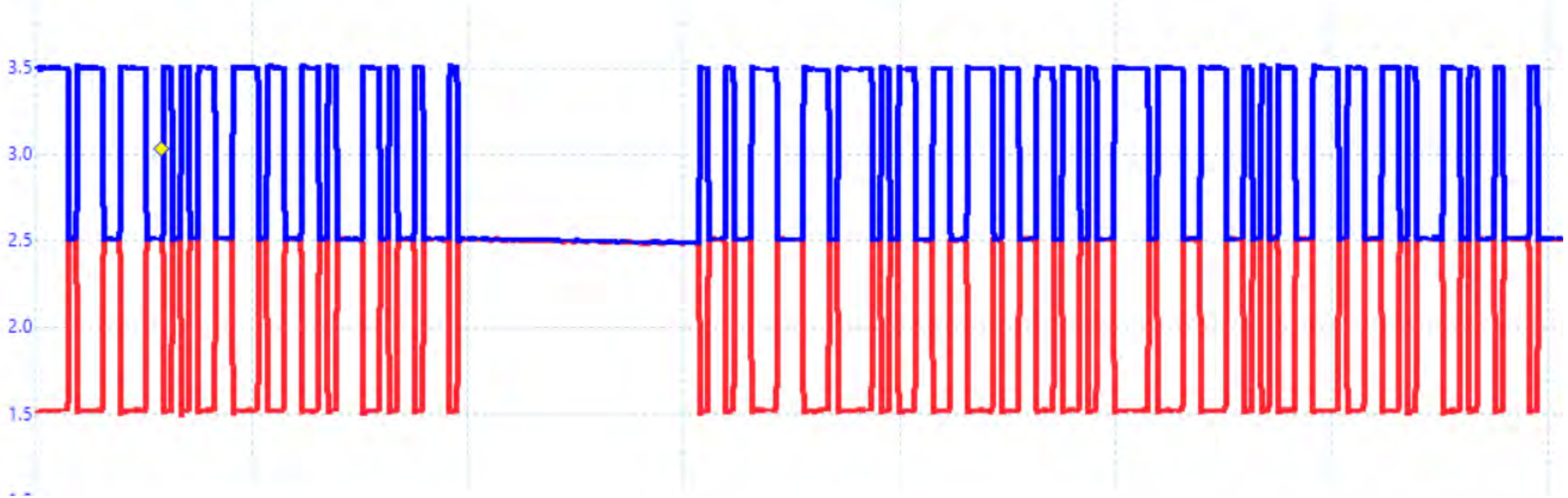

CANFD Bus (Flexible Data Rate)

CAN FD is an advanced automotive network protocol that allows higher data output and larger messages than standard CAN, using the same physical wiring but with updated controllers and software. It enables modern vehicle functions like high-speed diagnostics, OTA updates, and ADAS coordination.

Backward-Compatible - CAN FD controllers can still handle standard CAN traffic.

Section	Classical CAN	CAN FD (ISO)
Data Length	0 to 8 bytes	0 to 64 bytes
Control Field	DLC only	DLC + EDL + BRS + FDF + reserved bits
CRC Field	15-bit	17-bit (0–16 bytes) / 21-bit (17–64 bytes)
Bit Rate	Fixed (1 Mbps max)	Arbitration phase fixed, **data phase can be faster (up to 8 Mbps)**
New Bits	✗	✓ `EDL` (Extended Data Length), `BRS` (Bit Rate Switch), `ESI` (Error State Indicator)

Flex Ray Bus

FlexRay is a **deterministic, high-speed, fault-tolerant automotive network protocol**, designed for **real-time systems** like: Brake-by-wire, Steer-by-wire, Redundant safety-critical systems & others.

Feature	CAN / CAN FD	FlexRay
Bitrate	1 Mbps / 8 Mbps max	10 Mbps per channel
Determinism	No (priority-based)	Yes (time slots)
Payload Size	8 B / 64 B	Up to 254 B
Topology	Bus only	Bus, Star, or Hybrid
Channels	Single	Dual (redundant or dual-load)
Fault Tolerance	Limited	Built-in redundancy
Timing	Event-based (arbitration)	Time-triggered (preallocated)

Flex Ray Bus Specifics

Flex Ray will have no connection to the DLC!

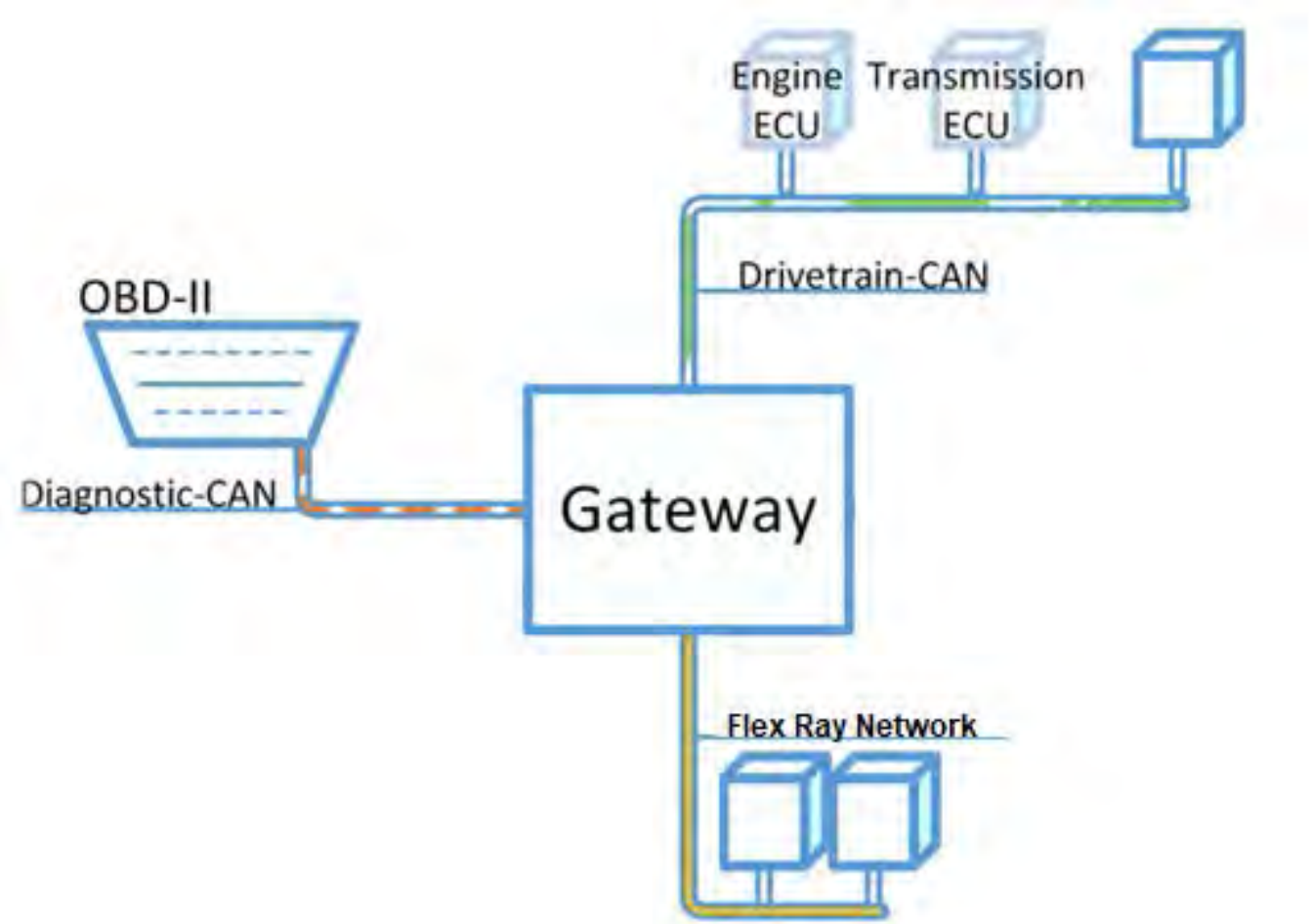

2 Wire CAN Bus Speeds

Feature	Classical CAN	CAN FD	FlexRay
Common Bitrate in Practice	125–500 kbps	500 kbps arb / 2–5 Mbps data	10 Mbps per channel
Typical Payload Size	8 bytes max	64 bytes max	254 bytes max
Used For	Powertrain, body, diagnostics	OTA updates, ADAS, gateways	X-by-wire, chassis coordination
Max Nodes (practical)	~30 nodes	~30 nodes	~64 slots per cycle (time slots)
ECU Examples	PCM, BCM, ABS, SRS	Gateway, TCU, ADAS, Flash updates	Steer-by-wire, Dynamic Chassis, Brake control
Scan Tool Compatibility	✅ Universal	⚠️ Requires FD-capable tool	❌ Proprietary / very limited

What Tools Do We Need?

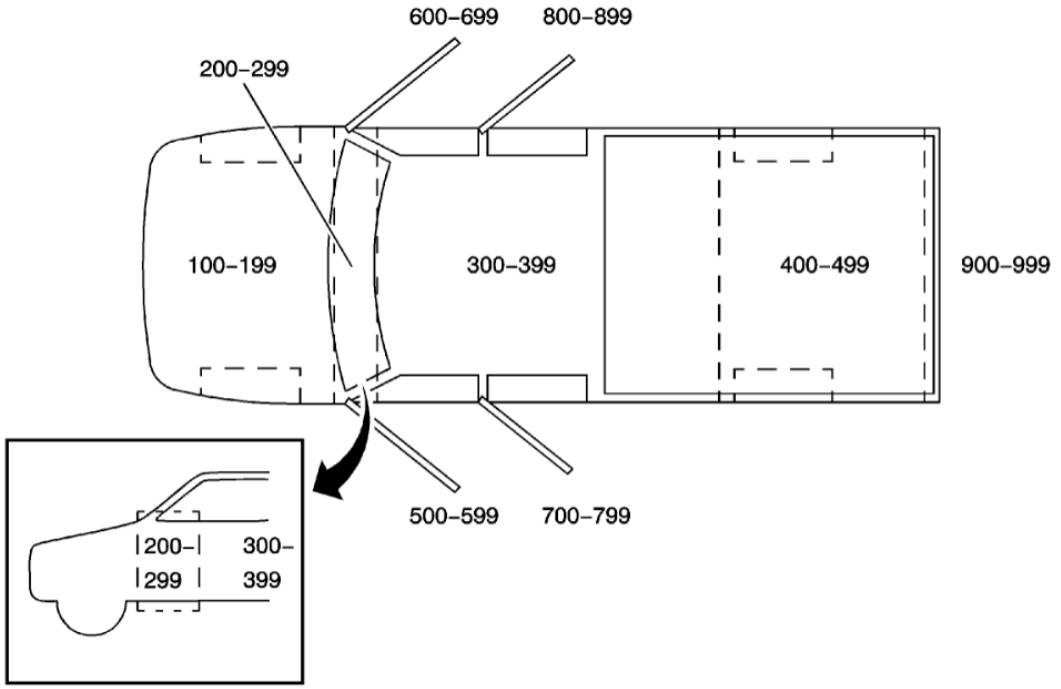

Diagnostic Tools

Oscilloscopes

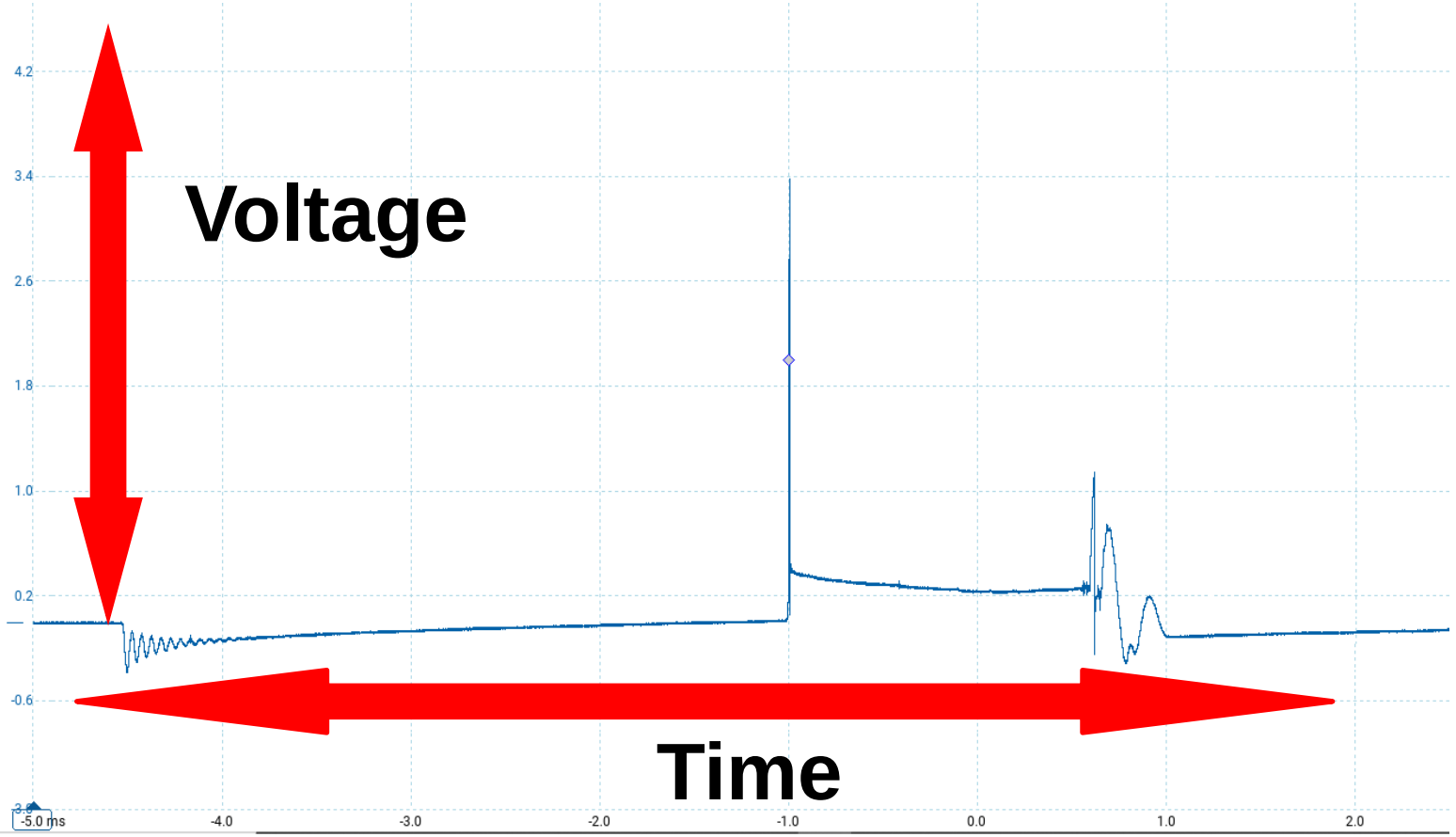

- AC coupling
- Variable sample rates
- DSO over “live only”
- Refresh rate is superior
- Documentation

Diagnostic Tools

Oscilloscopes

Run and Gun Scopes!

- Usually lower cost
- Typically, low channel count
- Very few “DS” options
- Limited waveform manipulations

Diagnostic Tools

DLC Breakout Box

Diagnostic Tools

Having the correct tool for the job is only half of the battle, It's significantly more important to understand the features and limitations of the tool you own.

"The best scope in the world is the one you have"

Wiring Diagrams

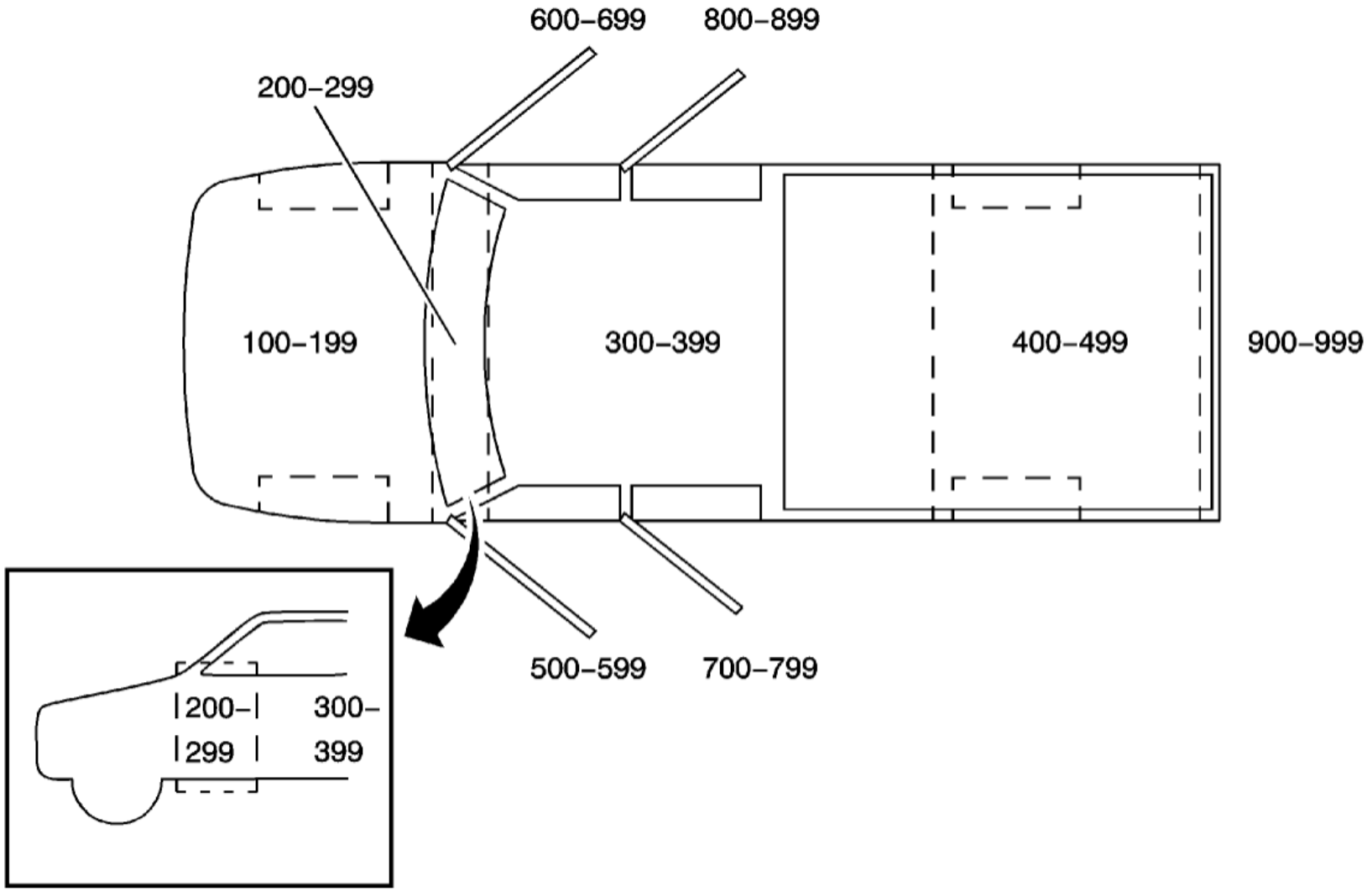

Vehicle Zoning:

Wiring diagrams, junction connectors, splices and other things use this zoning strategy.

2020 Hyundai Palisade

Data Link Details (1) SD200-1

C-CAN

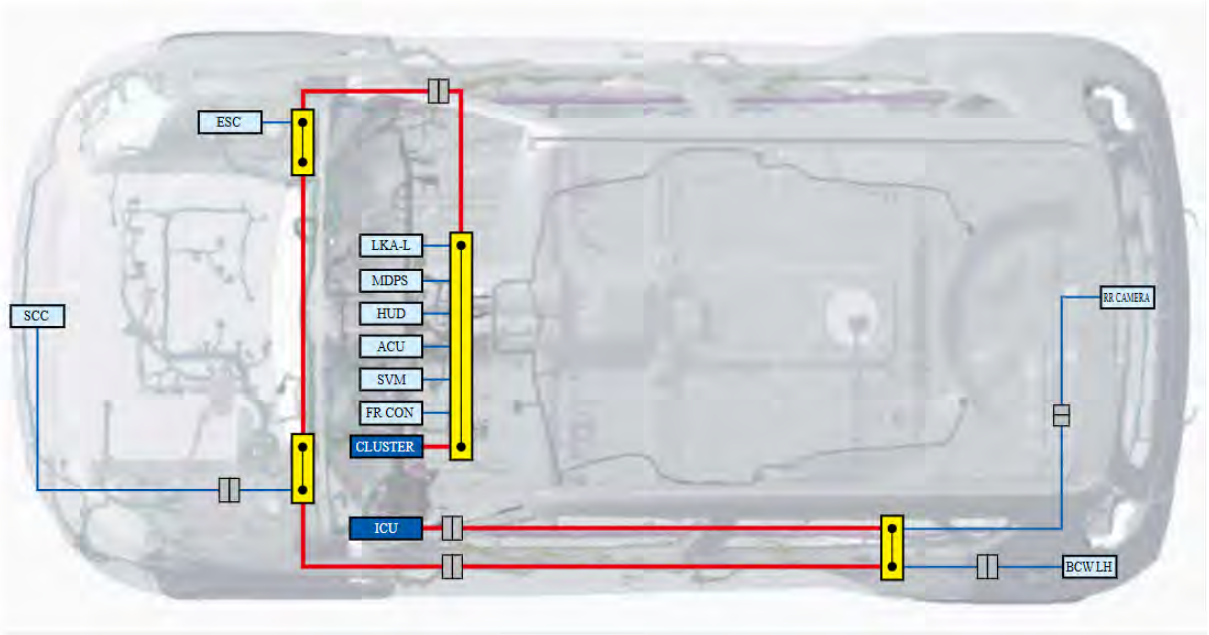

ICU	ICU Junction Block (Terminating Resistance Load)
CLUSTER	Instrument Cluster (Terminating Resistance Load)
MDPS	MDPS Unit
SVM	Surround View Monitor Unit
ACU	SRS Control Module
ESC	ESC Module
BCW LH	Blind-Spot Collision Warning Unit LH
RR CAMERA	License Lamp Assembly
HUD	Head-Up Display
FR CON	Front Console Switch
SCC	Smart Cruise Control Radar
LKA-L	Lane Keeping Assist Unit(Line)

: Harness Connection
: Terminating Resistance Load
: Main Wire Twist Pair
: Component Name
: Main Wire Pair (Option)
: Joint Connector
: Sub Twist Pair

2020 Hyundai Palisade

ICU	ICU Junction Block (Terminating Resistance Load)
CLUSTER	Instrument Cluster (Terminating Resistance Load)
MDPS	MDPS Unit
SVM	Surround View Monitor Unit
ACU	SRS Control Module
ESC	ESC Module
BCW LH	Blind-Spot Collision Warning Unit LH
RR CAMERA	License Lamp Assembly
HUD	Head-Up Display
FR CON	Front Console Switch
SCC	Smart Cruise Control Radar
LKA-L	Lane Keeping Assist Unit(Line)

2022 Jeep Grand Wagoneer (WL)

REPORT VEHICLE DID-I

Note: The following is unofficial user submitted information. Always do your due diligence and use your own discretion before performing a repair.

Date	Engine	Concern	
8/9/2022	3.6L V6 24V VVT ENGINE UPG I W/ESS	bus codes no display no radio start stop lamp on	0 users have reported similar concerns

Cause: SPREAD_TERMINAL

Cause Details: bad fit

Correction: replaced bus terminals a sgw module

Related Incidents: >

REPORT A RELATED DID-I

Discussion, Where Do We Start?

You have a 2 wire CAN network that is COMPLETE, 60ohm measured, with NO COMMUNICATION!

No communication with ANY module.

Where Do We Start?

Confirmation
Initial Analysis*
Research*
Build a Test Plan
Execute Plan
Make Diagnosis
Determine Root Cause
DOCUMENTATION!!!

Where Do We Start?

Confirmation

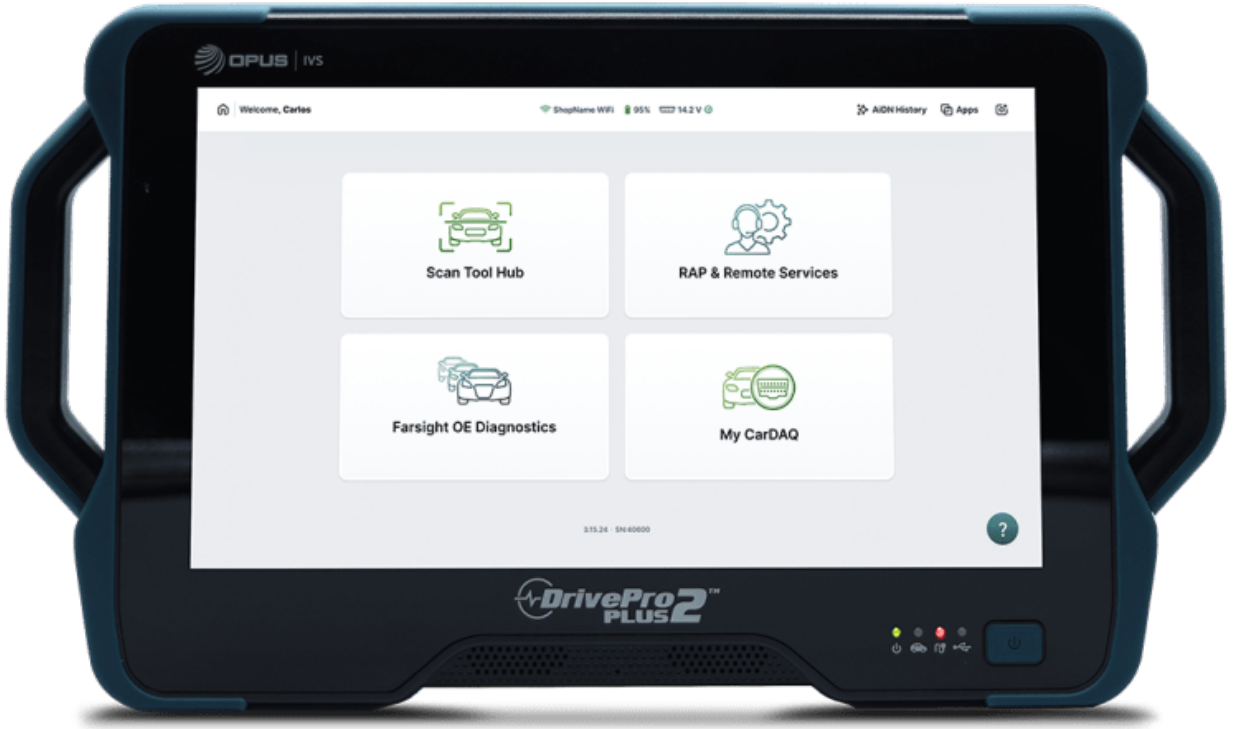

Confirmation

Remember not all tools are created equal!

Have multiple scan tools, OE are the best for each individual situation.

Know your tool and know its limitations as not all tools can communicate with all modules on all makes and models.

Examples?

Dealer Level Scan Tool Capabilities

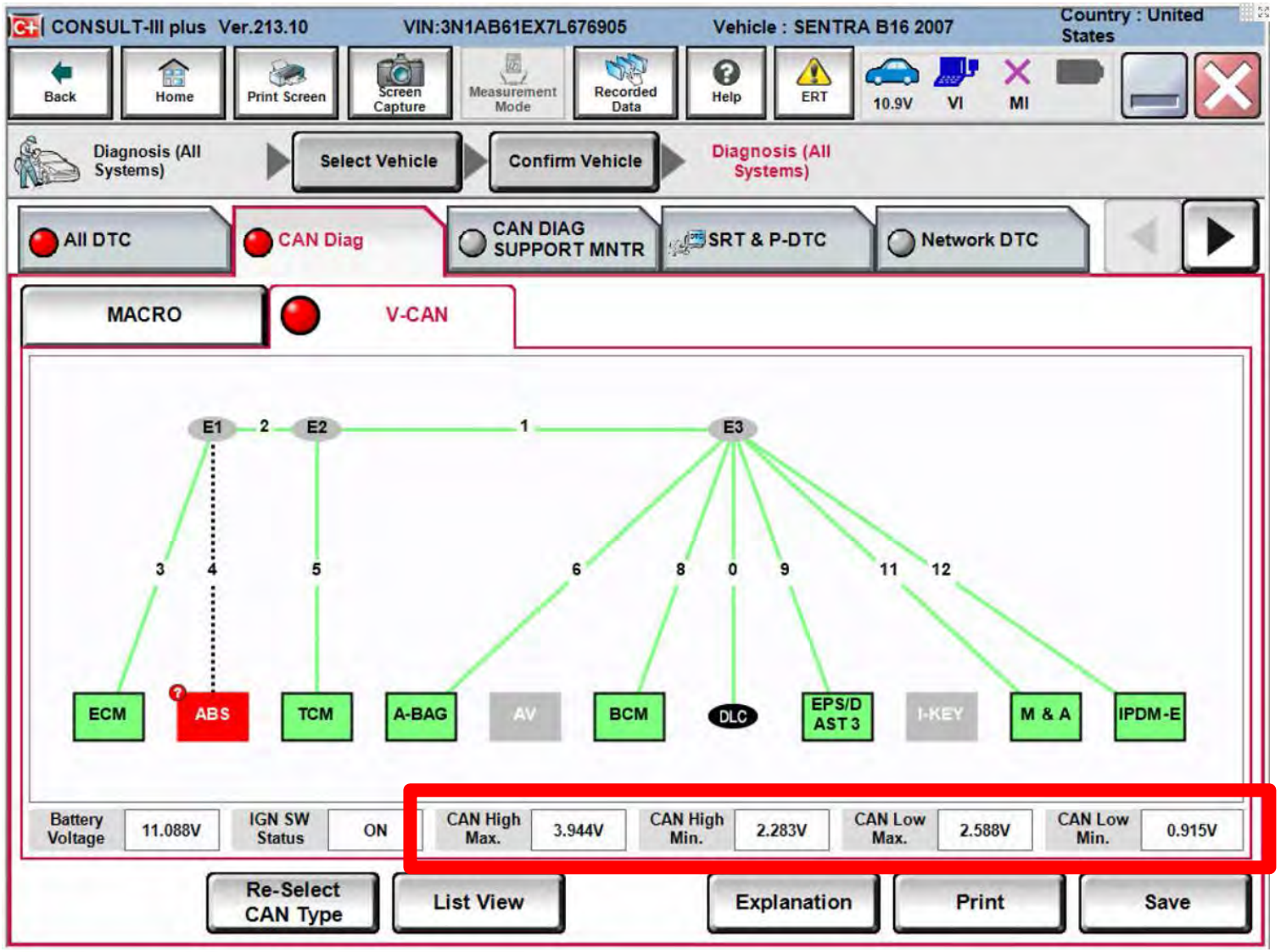

NTB10-066a

CAN COMMUNICATION CODES – DIAGNOSTIC TIPS & GUIDELINES

Red = Current Communication Error
Orange = Past or Intermittent Communication Error
Black = Not diagnosed
Green = Normal Operation
Pink = Module error

Note: If module is highlighted in pink when other modules or segments are highlighted in red or orange, perform diagnosis on other modules, erase DTCs, and run Auto CAN diagnosis with CONSULT-III again. If module is still highlighted in pink, replace module.

Dealer Level Scan Tool Capabilities

Aftermarket Scan Tool Capabilities

Where Do We Start?

Initial Analysis

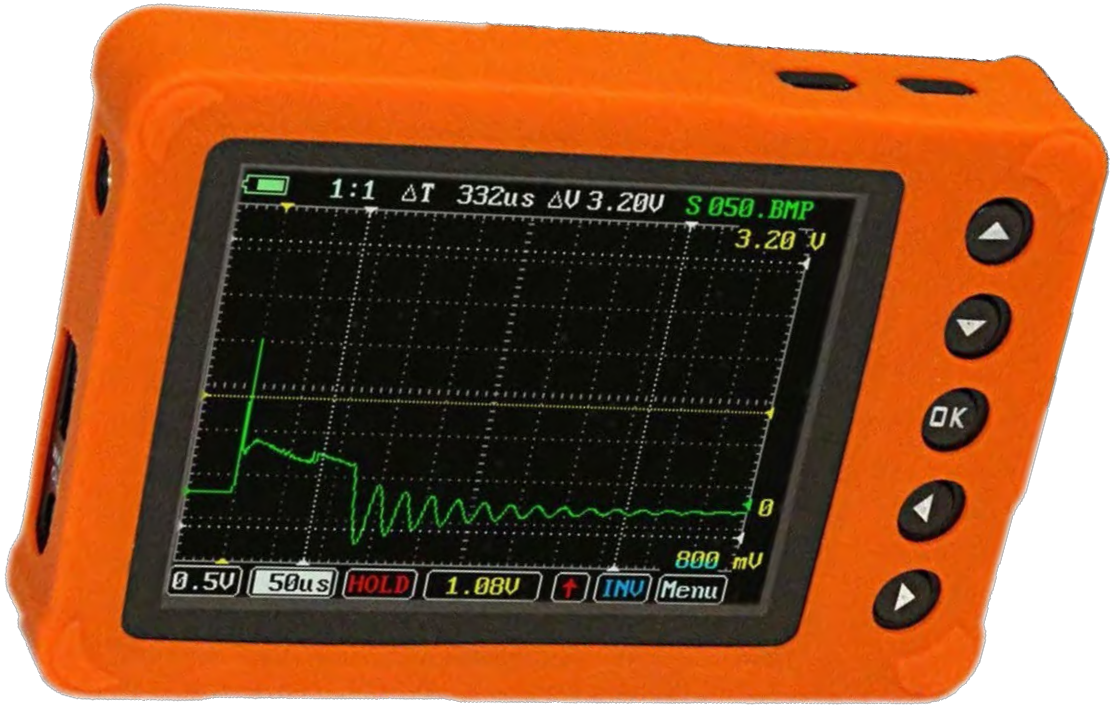

Research

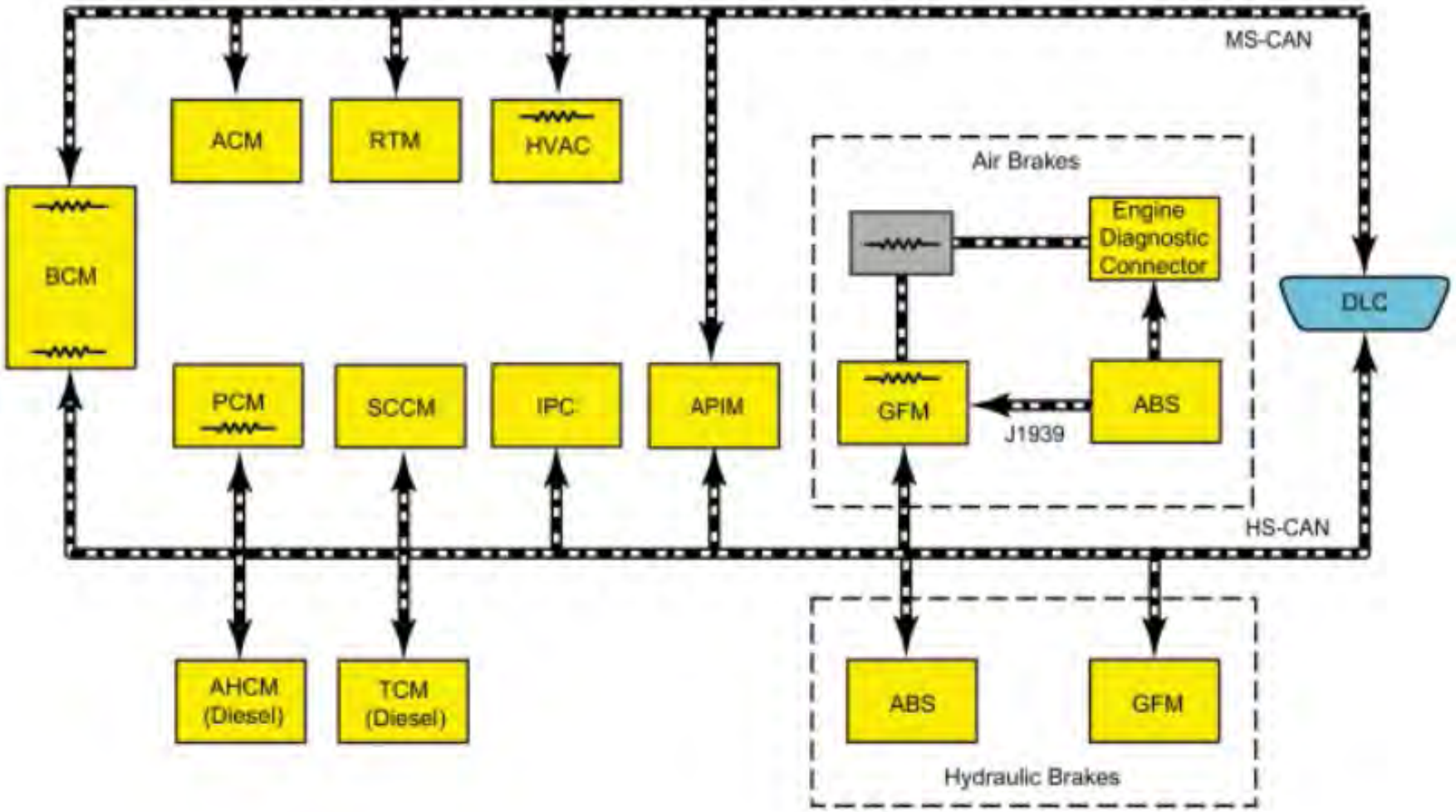
MS-CAN
ACM
RTM
HVAC
BCM
Air Brakes
Engine Diagnostic Connector
DLC
PCM
SCCM
IPC
APIM
GFM
J1939
ABS
HS-CAN
AHCM (Diesel)
TCM (Diesel)
ABS
GFM
Hydraulic Brakes

Research

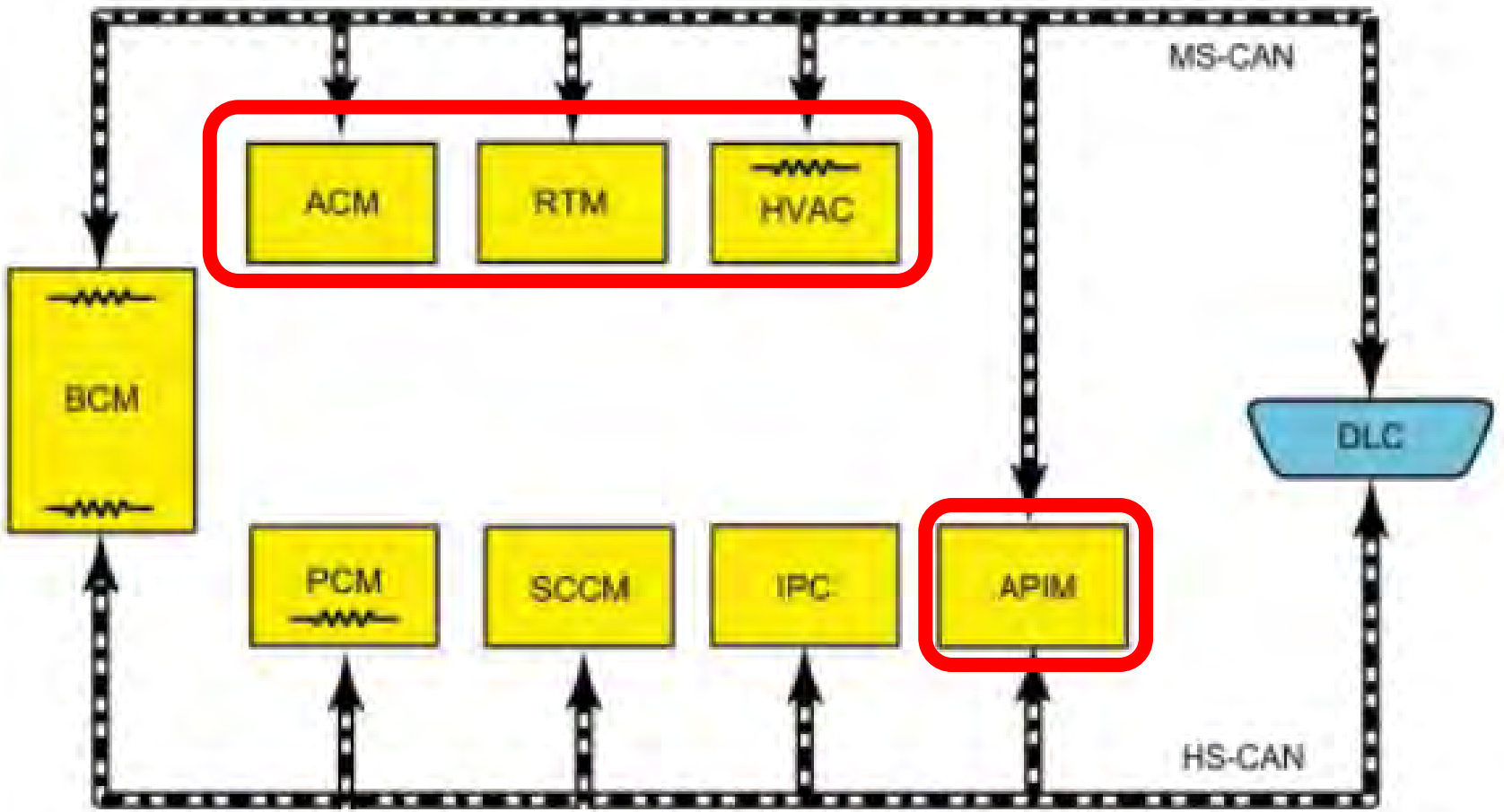

We can communicate with these 4 modules, what is our issue narrowed down to?

Research

120 Ω Resistors

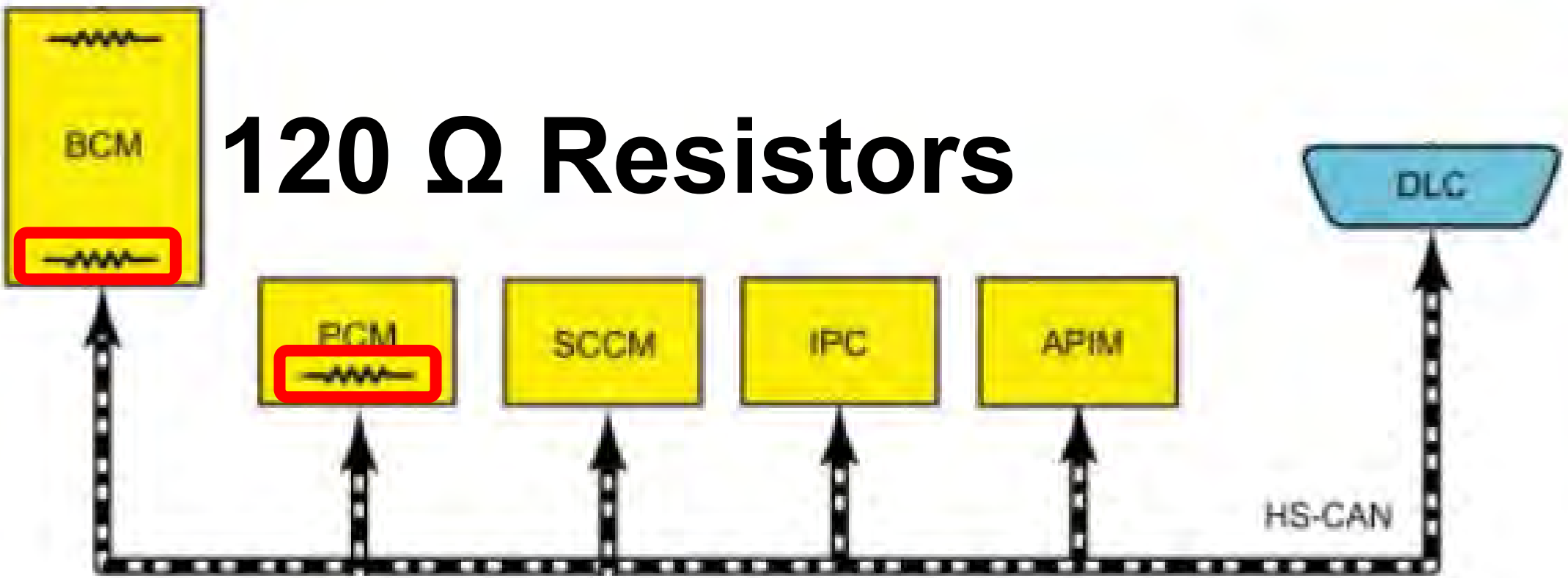

Research

120 Ω Resistors

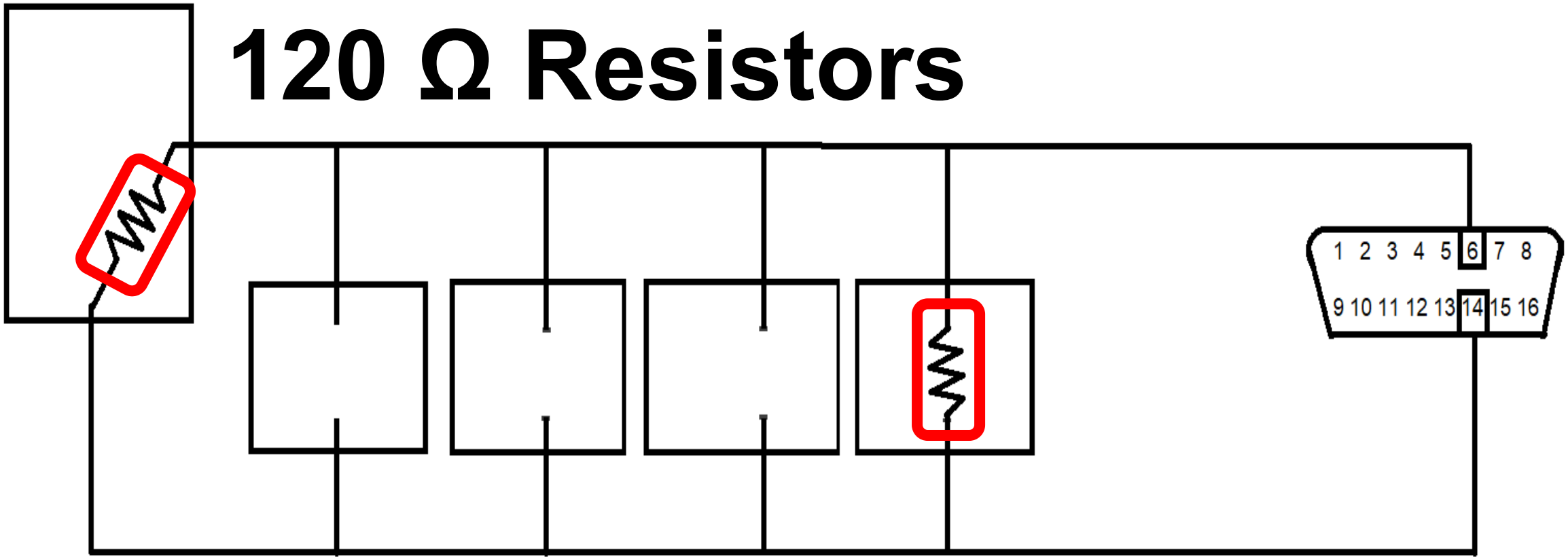

Initial Analysis

Baseline Resistance Test:

Location	Short to B+	Short to B-	High Resistance	No Issues
Pins 6 & 14	60Ω (+/- 10Ω)	60Ω (+/- 10Ω)	0 or 120Ω	60Ω (+/- 10Ω)
Pin 14 to B+	< 2Ω	5-80Ω	Open	Open
Pin 14 to B-	5-80Ω	60Ω (+/- 10Ω)	Open	Open
Pin 6 to B+	60Ω (+/- 10Ω)	5-80Ω	Open	Open
Pin 6 to B-	5-80Ω	< 2Ω	Open	Open

Is it a short? Or…

Possible Cause

- IPM, SCM are not Sleep condition
  1. CAN High Line short to battery
  2. CAN Low Line short to battery
  3. CAN High Line short to ground
  4. CAN Low Line short to ground
  5. CAN High and Low line short to each other
  6. CAN High Line short to 5V power
  7. CAN High Line open
  8. CAN Low Line open

⚠ CAUTION

Under Sleep condition, CAN High Line is 0V and CAN Low Line is battery voltage.

2016 KIA Carnival

Initial Analysis

Our network has 60 Ω across pins 6 & 14

What do we know?

What can we check next, and how?

Initial Analysis

Scope it! (Known Good)

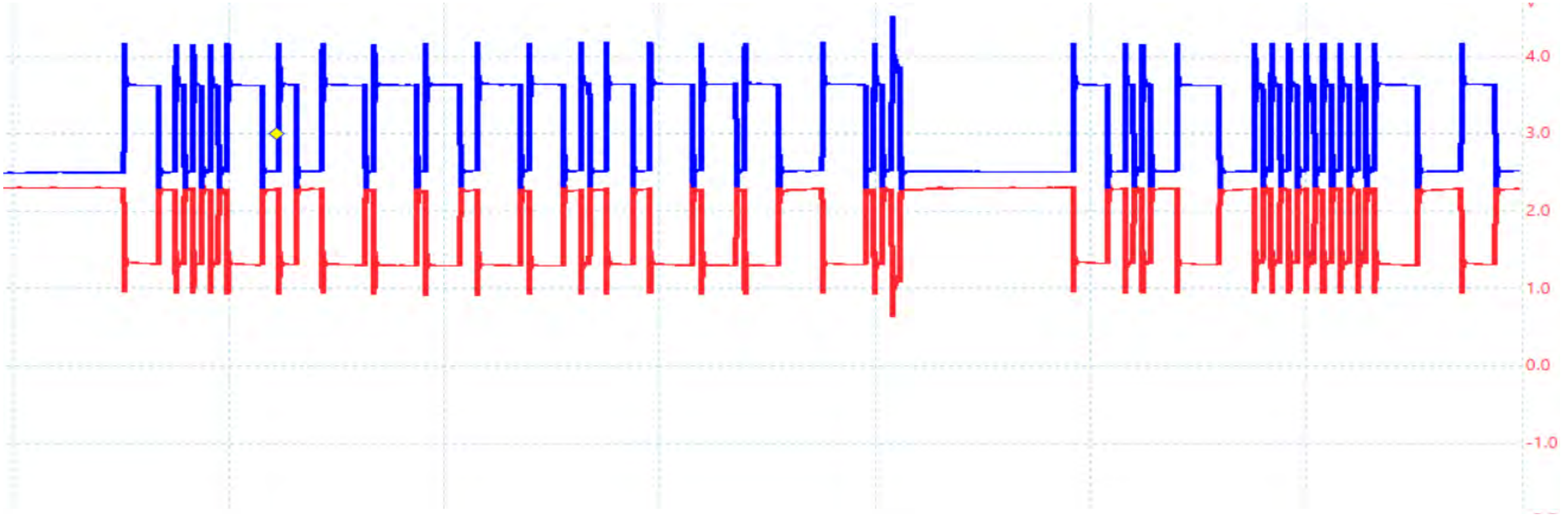

Initial Analysis

The Blue Trace is CAN H (Pin 6)
The Red Trace is CAN L (Pin 14)

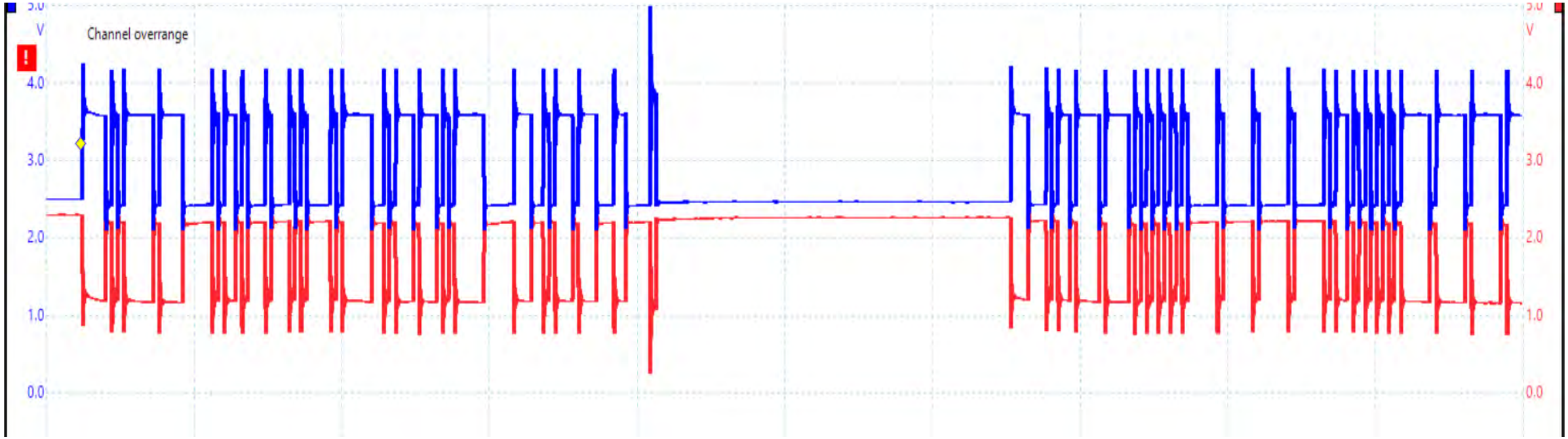

Initial Analysis

Baseline Resistance Test:

Location	Short to B+	Short to B-	High Resistance	No Issues
Pins 6 & 14	60Ω (+/- 10Ω)	60Ω (+/- 10Ω)	0 or 120Ω	60Ω (+/- 10Ω)
Pin 14 to B+	60Ω (+/- 10Ω)	5 - 80Ω	Open	Open
Pin 14 to B-	5 - 80Ω	< 2Ω	Open	Open
Pin 6 to B+	< 2Ω	5 - 80Ω	Open	Open
Pin 6 to B-	5 - 80Ω	60Ω (+/- 10Ω)	Open	Open

Initial Analysis

Pin 14 shorted to B+

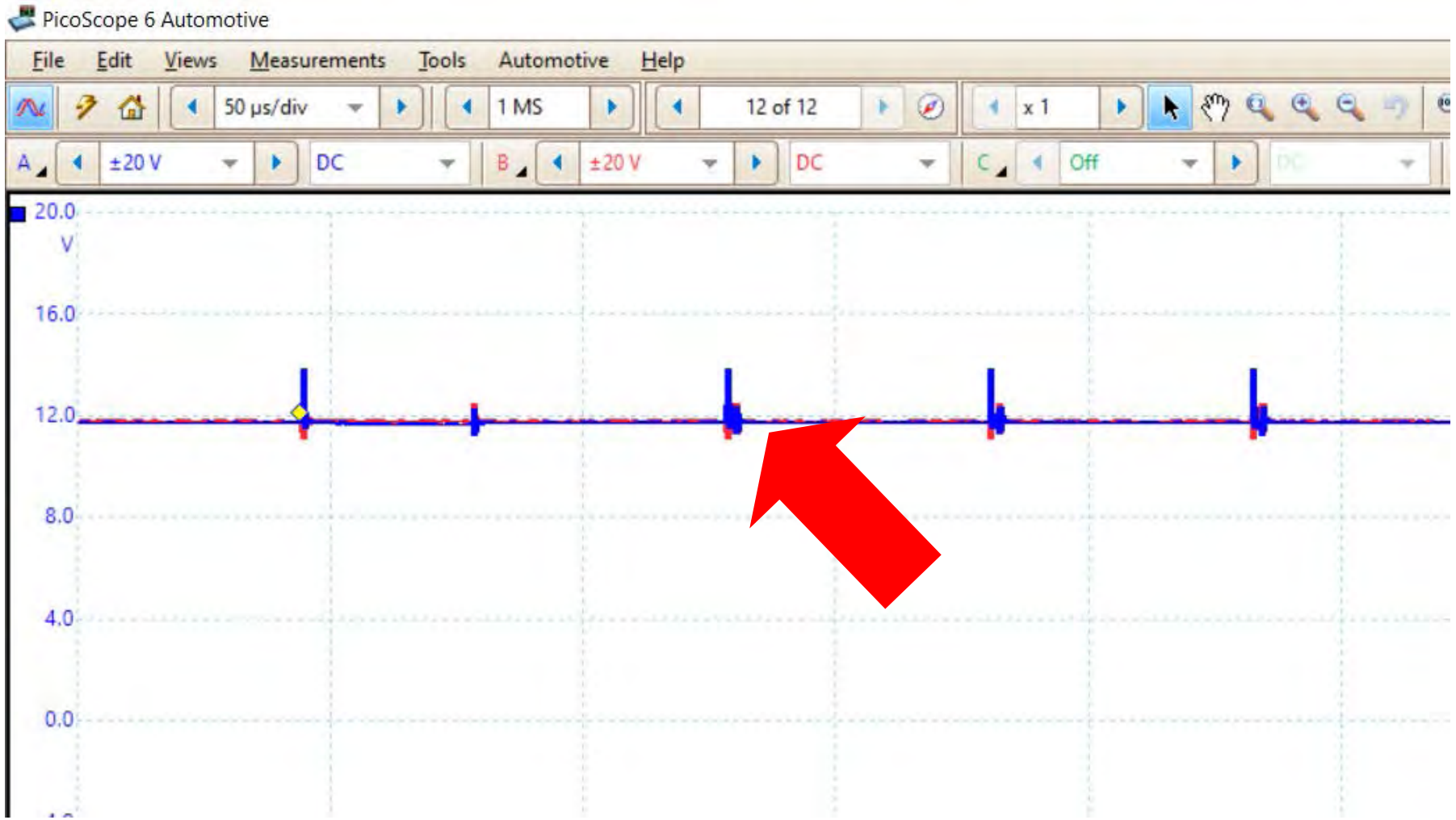

CAN L (Pin 14)

CAN H (Pin 6)

Initial Analysis

Baseline Resistance Test:

Location	Short to B+	Short to B-	High Resistance	No Issues
Pins 6 & 14	60Ω (+/- 10Ω)	60Ω (+/- 10Ω)	0 or 120Ω	60Ω (+/- 10Ω)
Pin 14 to B+	60Ω (+/- 10Ω)	5 - 80Ω	Open	Open
Pin 14 to B-	5 - 80Ω	< 2Ω	Open	Open
Pin 6 to B+	< 2Ω	5 - 80Ω	Open	Open
Pin 6 to B-	5 - 80Ω	60Ω (+/- 10Ω)	Open	Open

Initial Analysis

Pin 14 shorted to B-

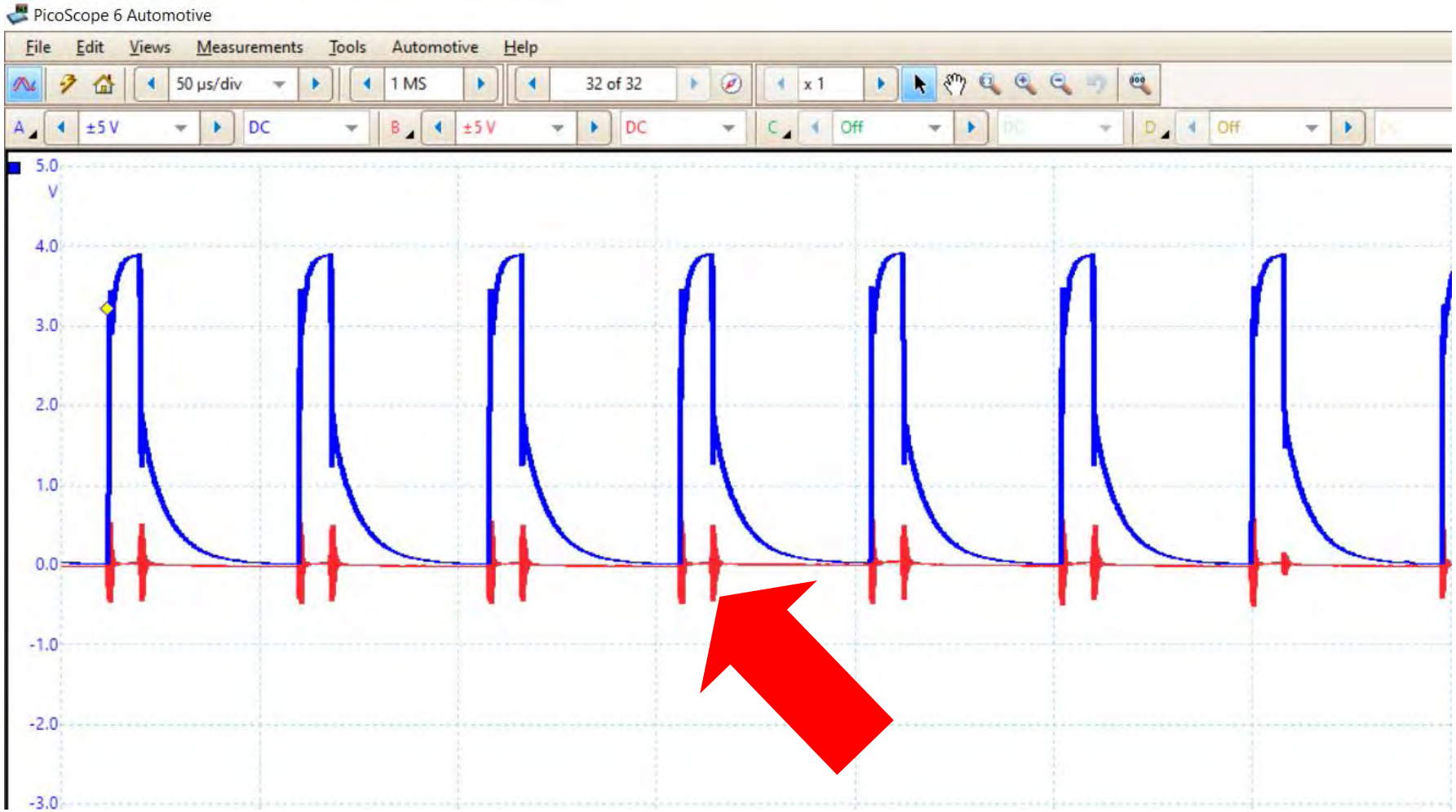

CAN L (Pin 14)

CAN H (Pin 6)

Initial Analysis

Baseline Resistance Test:

Location	Short to B+	Short to B-	High Resistance	No Issues
Pins 6 & 14	60Ω (+/- 10Ω)	60Ω (+/- 10Ω)	0 or 120Ω	60Ω (+/- 10Ω)
Pin 14 to B+	60Ω (+/- 10Ω)	5 - 80Ω	Open	Open
Pin 14 to B-	5 - 80Ω	< 2Ω	Open	Open
Pin 6 to B+	< 2Ω	5 - 80Ω	Open	Open
Pin 6 to B-	5 - 80Ω	60Ω (+/- 10Ω)	Open	Open

Initial Analysis

Pin 6 shorted to B+

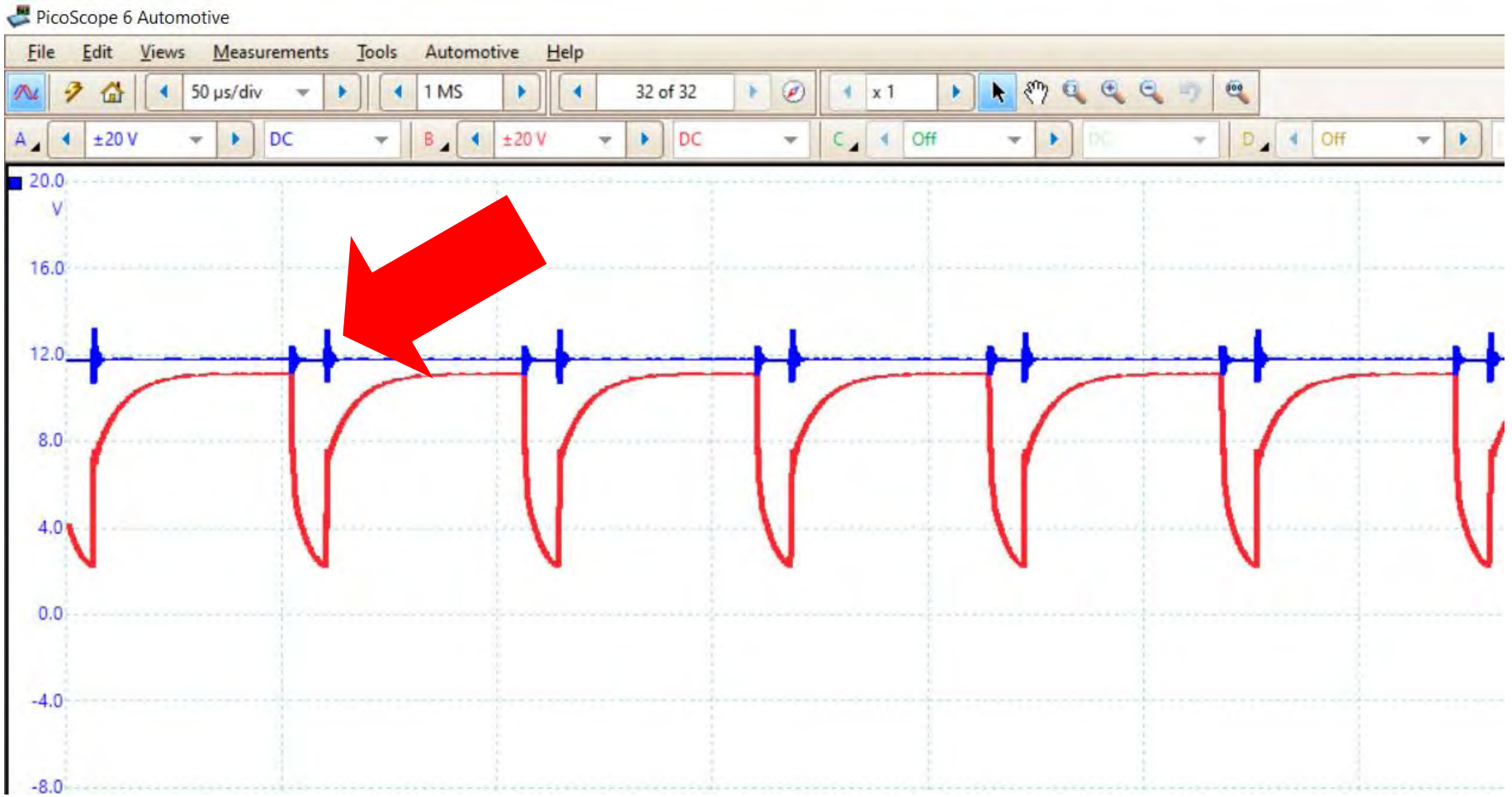

CAN L (Pin 14)

CAN H (Pin 6)

Initial Analysis

Baseline Resistance Test:

Location	Short to B+	Short to B-	High Resistance	No Issues
Pins 6 & 14	60Ω (+/- 10Ω)	60Ω (+/- 10Ω)	0 or 120Ω	60Ω (+/- 10Ω)
Pin 14 to B+	60Ω (+/- 10Ω)	5 - 80Ω	Open	Open
Pin 14 to B-	5 - 80Ω	< 2Ω	Open	Open
Pin 6 to B+	< 2Ω	5 - 80Ω	Open	Open
Pin 6 to B-	5 - 80Ω	60Ω (+/- 10Ω)	Open	Open

Initial Analysis

Pin 6 shorted to B-

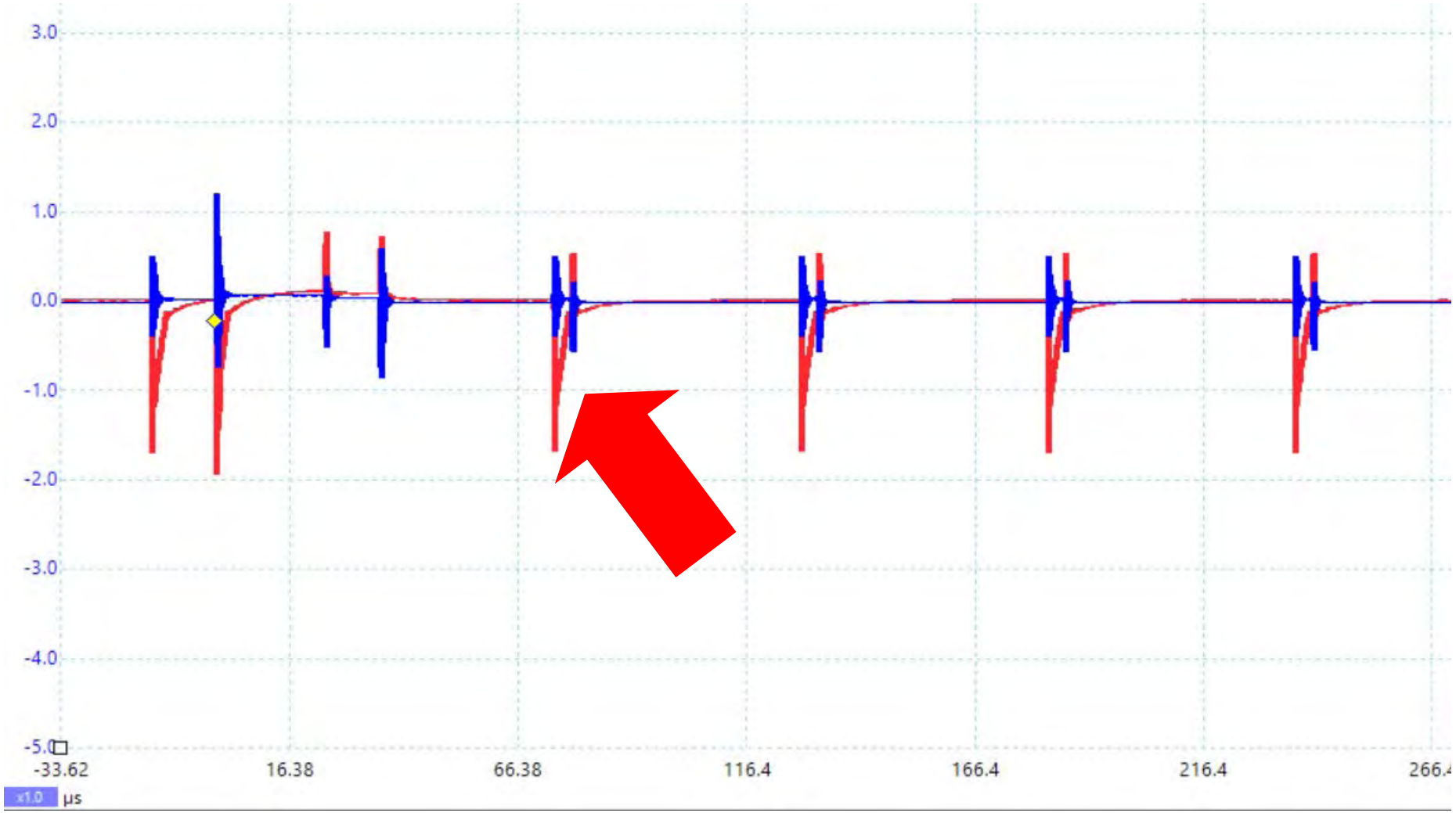

CAN L (Pin 14)

CAN H (Pin 6)

Initial Analysis

From Toyota Service Info

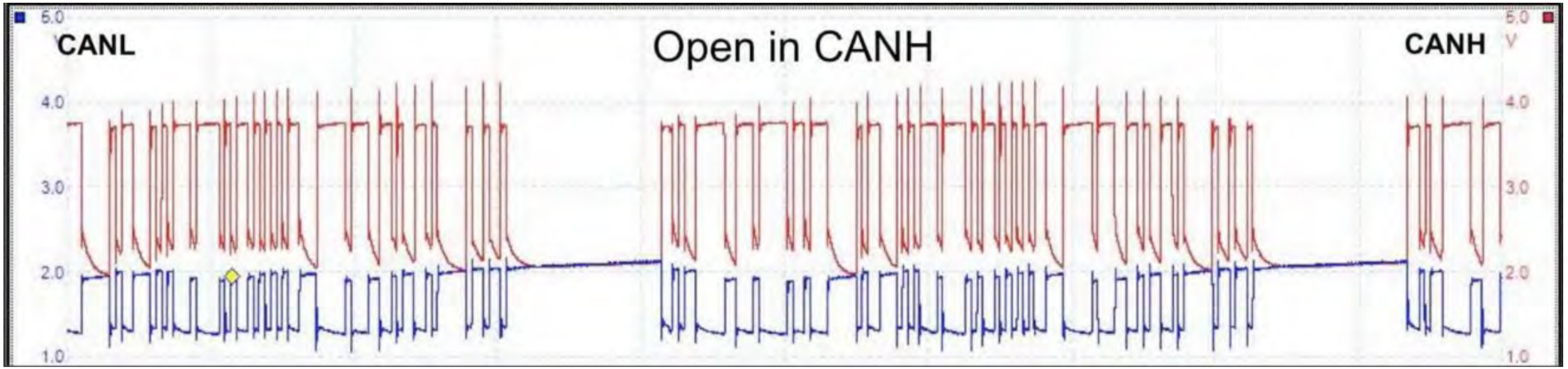

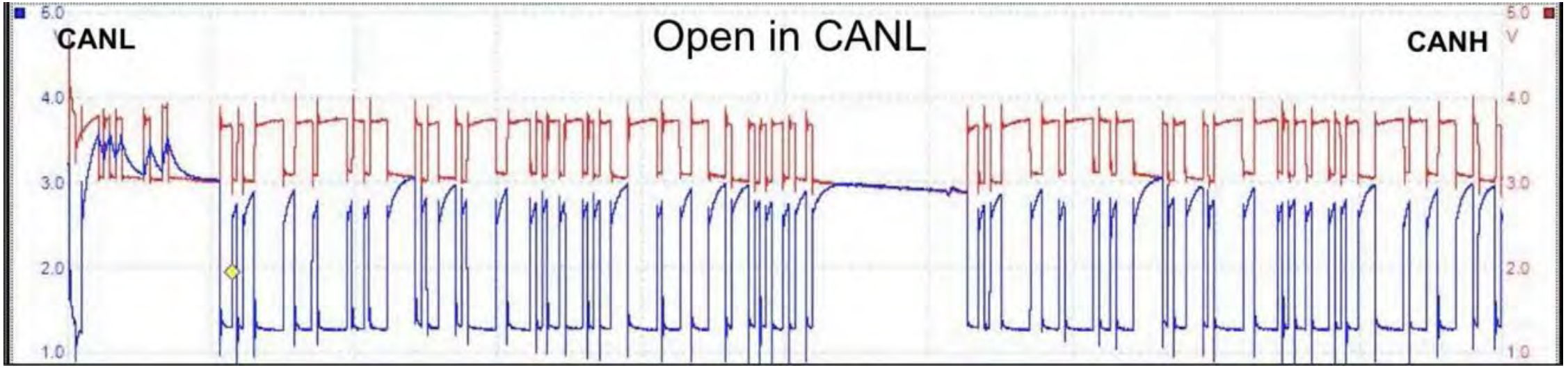

Initial Analysis

Our process for finding the source of each condition, rather it be a 60Ω short or 120Ω open, is the SAME!

Let’s divide and conquer!

Research / Build a Plan!

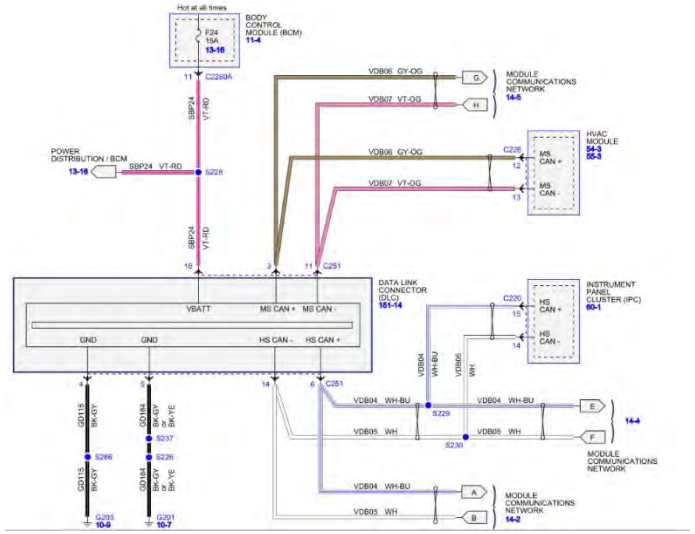

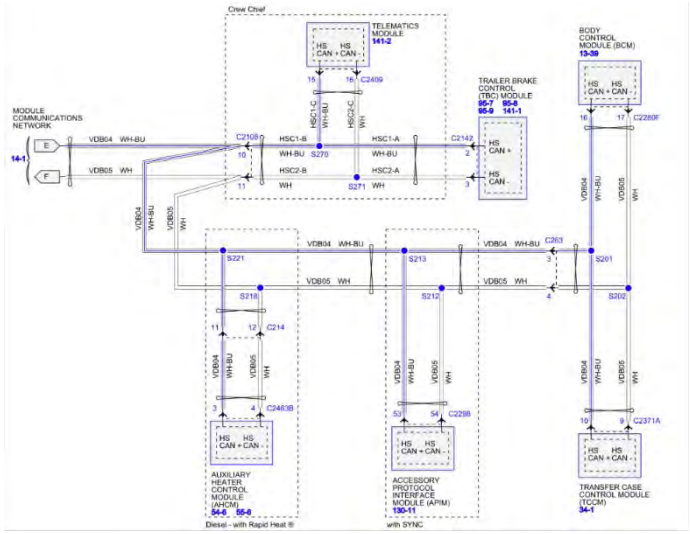

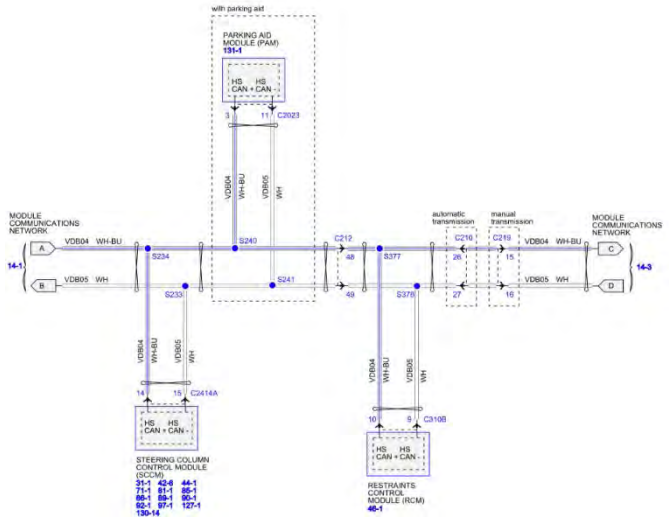

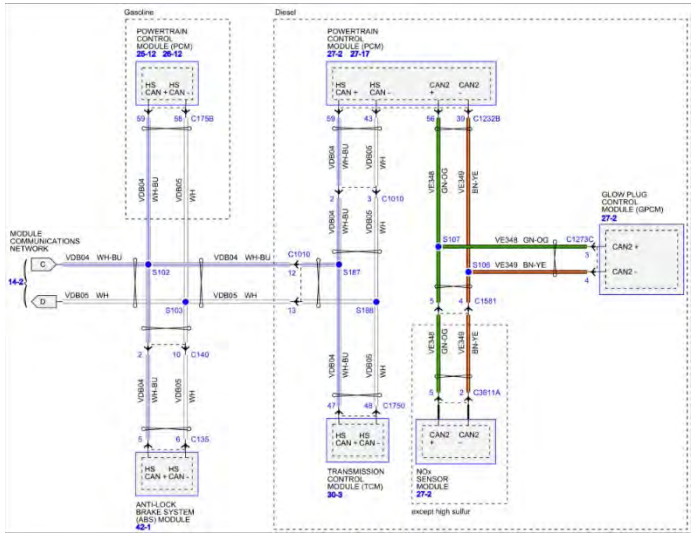

2011 F250 6.2L Gas - No Crank

Drove to jobsite like normal.

At lunch went to “warm-up” in the truck (Ambient temp below freezing).

No crank, lot’s of dash lights.

Pre-Scan < Network Monitor Result

Research / Build a Plan!

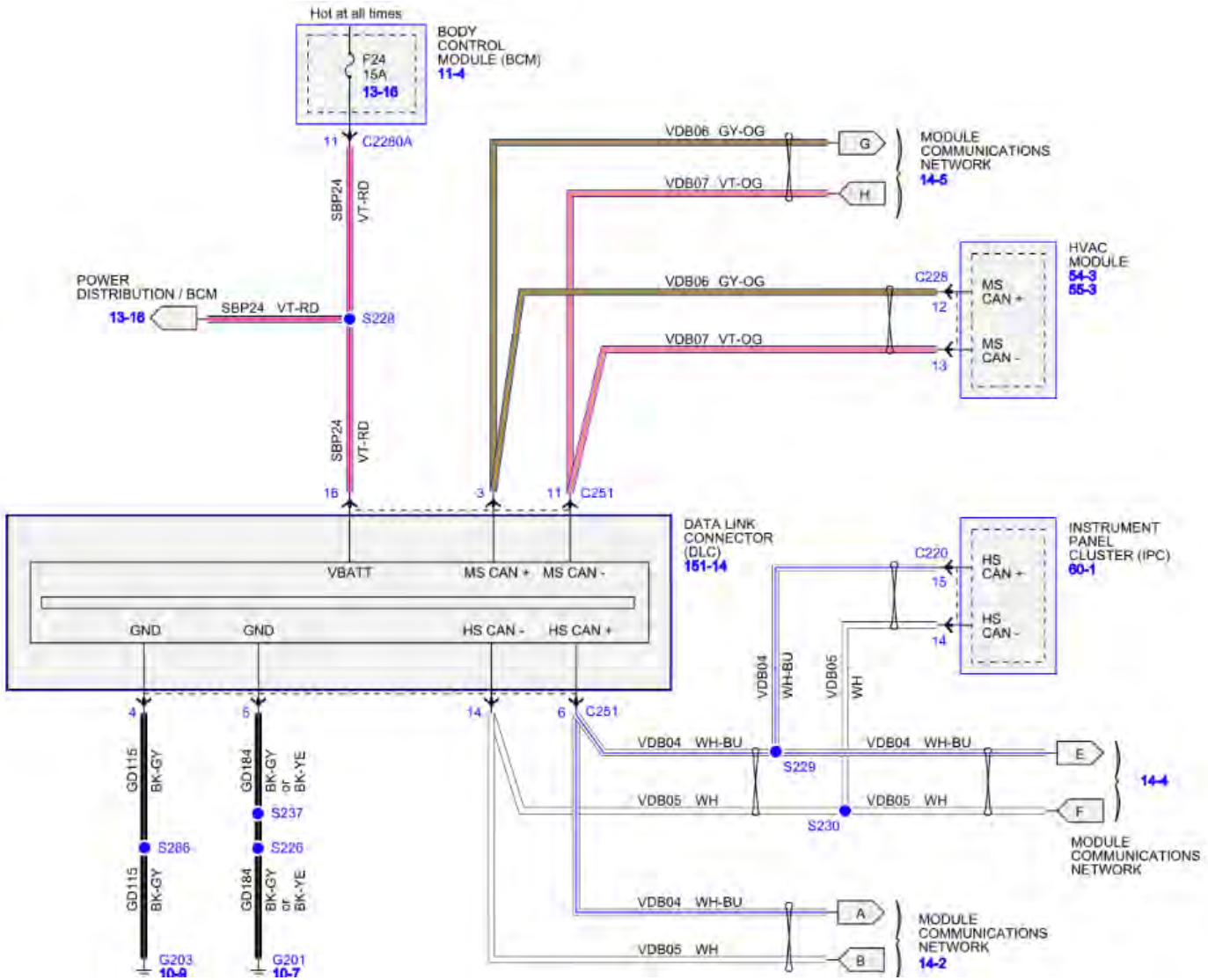

Pins 6, 14 show 120 Ohms resistance key out.

Let’s gather some information…

Research / Build a Plan!

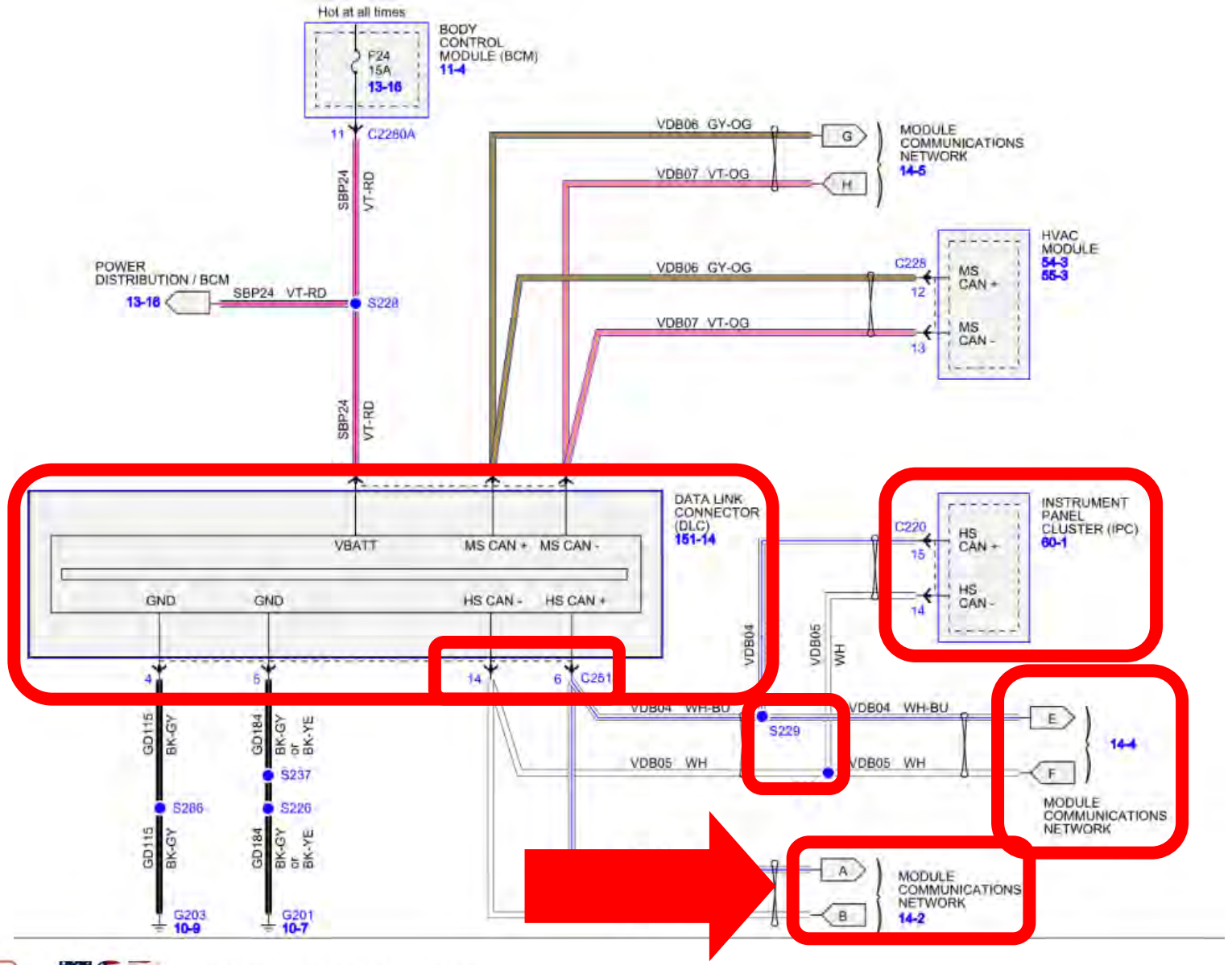

DLC is here

Pins 6, 14

IPC

Wires Splices

Continuations of the diagram

Lets dive into the next diagram, 14-2 Continuations A & B

Research / Build a Plan!

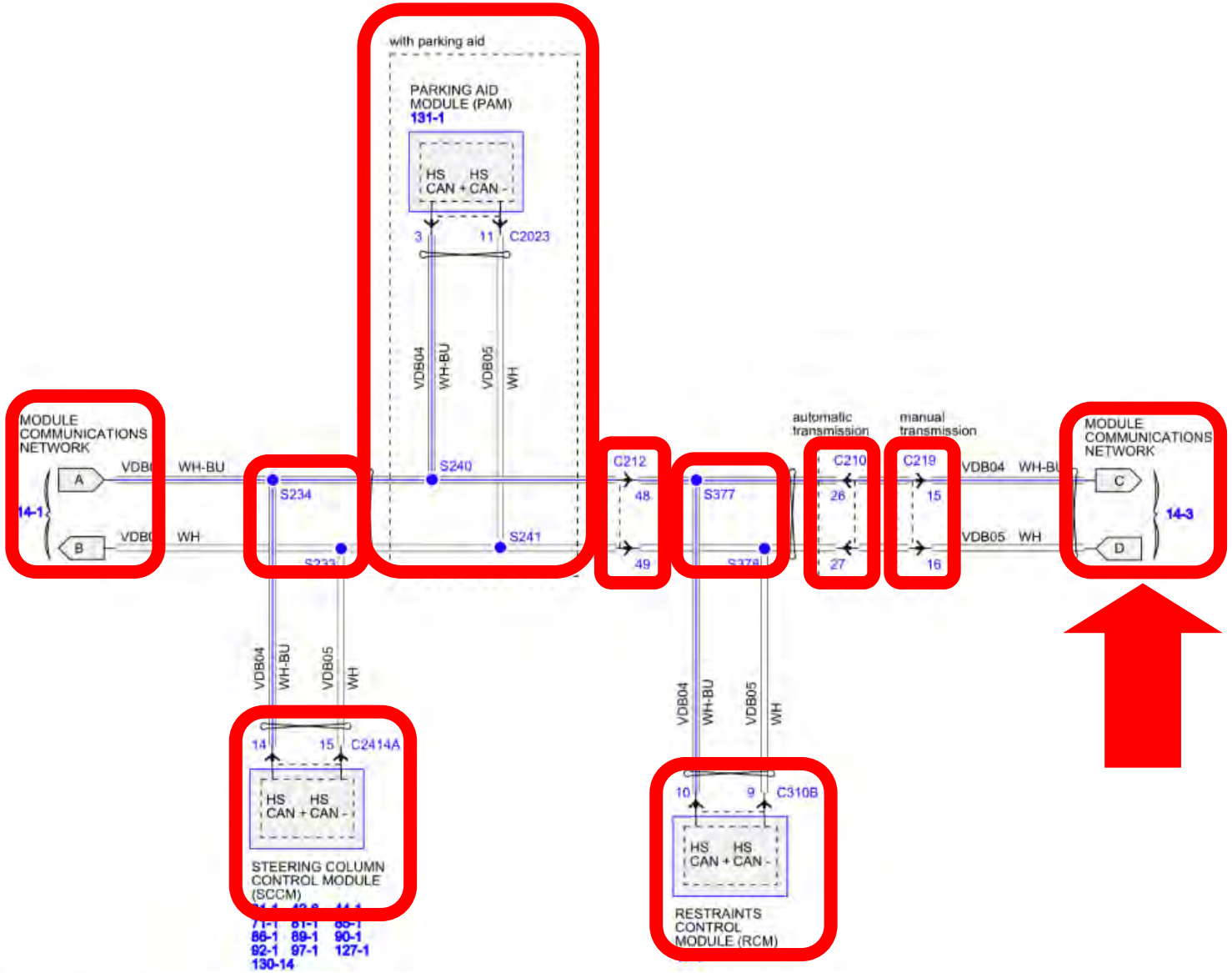

A & B is here

Splices

Optional Module

SCCM

RCM

Connector 1

Connector 2*

Connector 3*

Diagram 14-3

Research / Build a Plan!

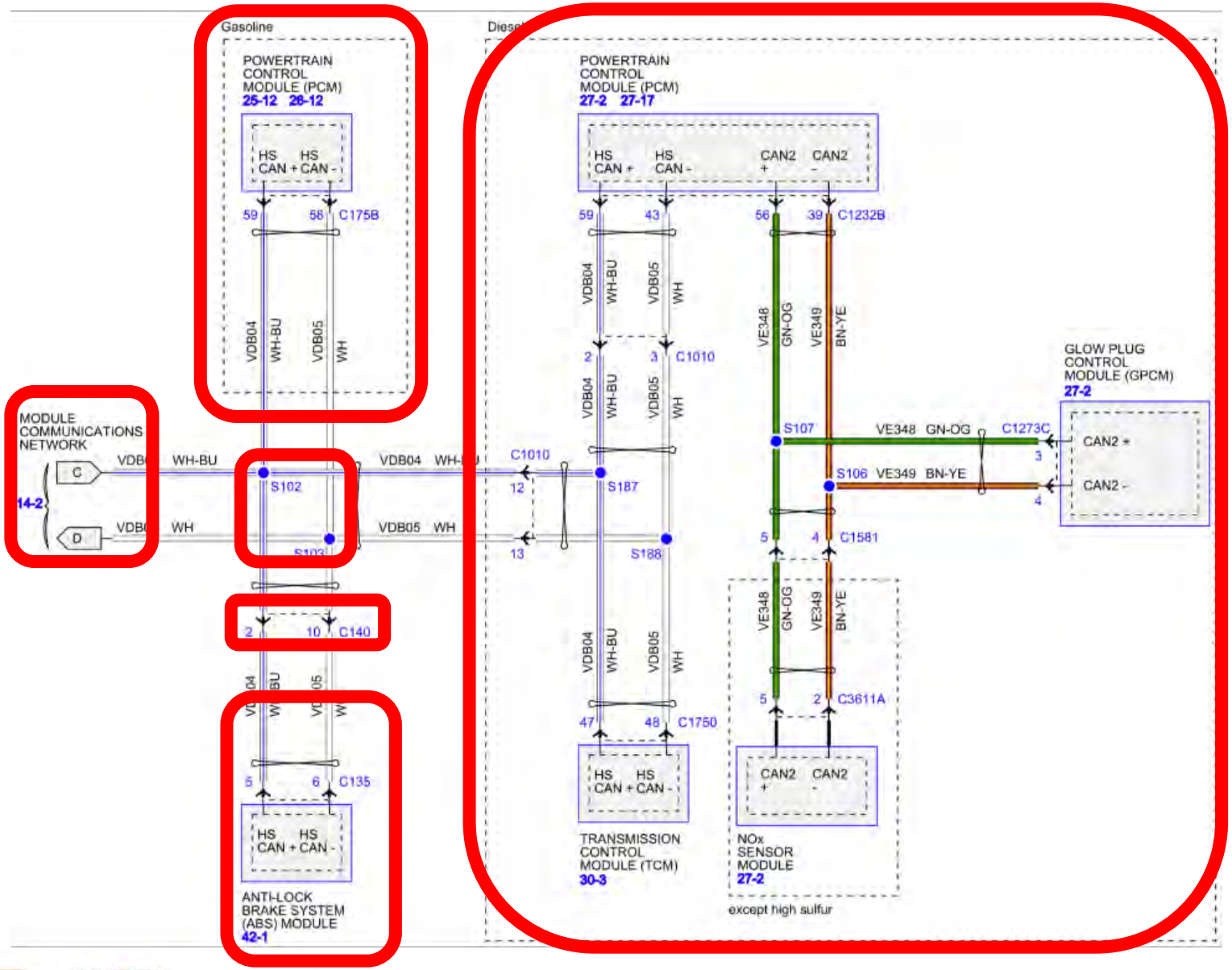

C & D is here

Splice

Gasoline Module

Diesel Option

ABS Module

Connector 4

Where do we go?

Build a Plan!

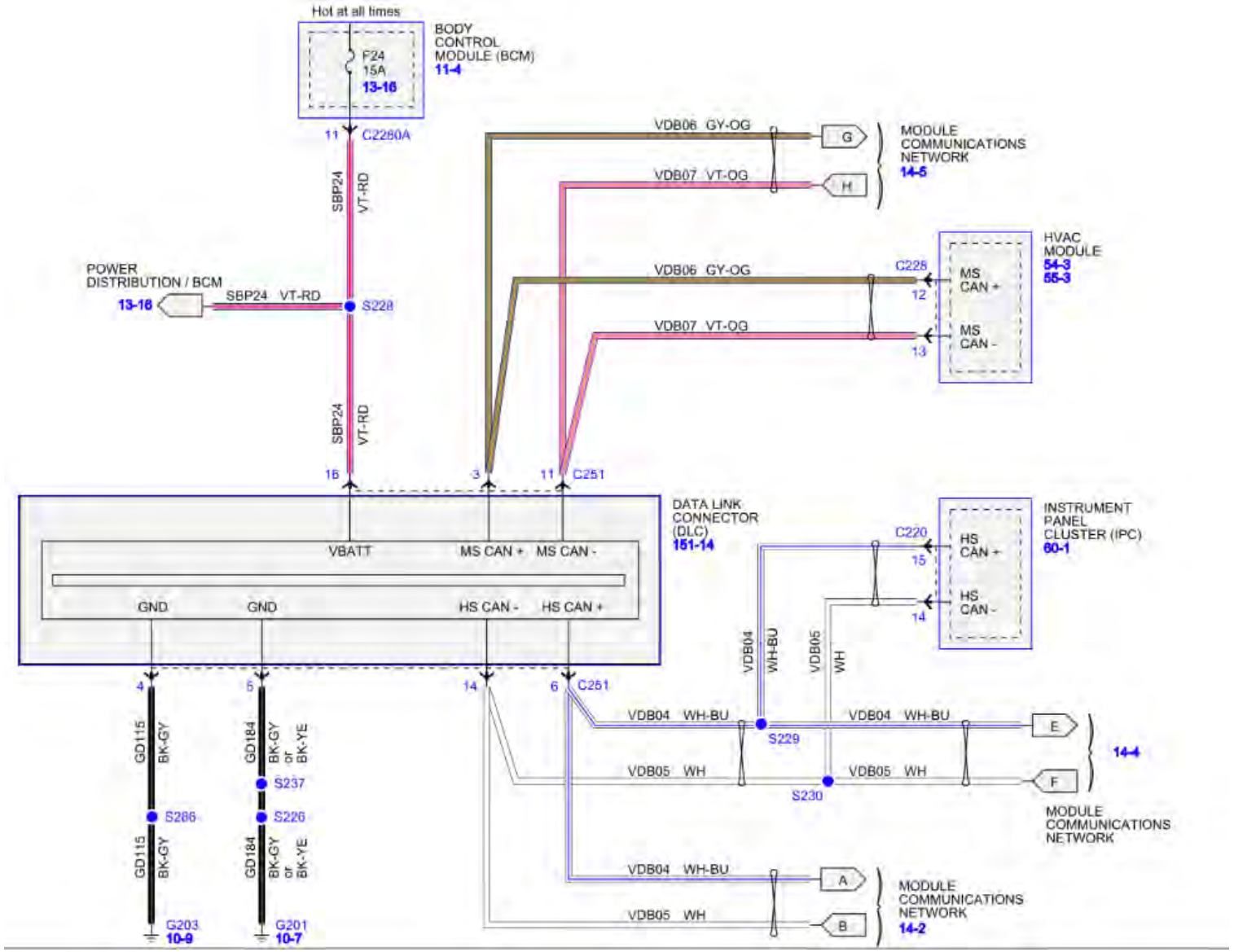

Remember Pins 6, 14 show 120 ohms resistance key out.

How we go forward is the same regardless of our resistance, but what we look for is what's important!

Build a Plan!

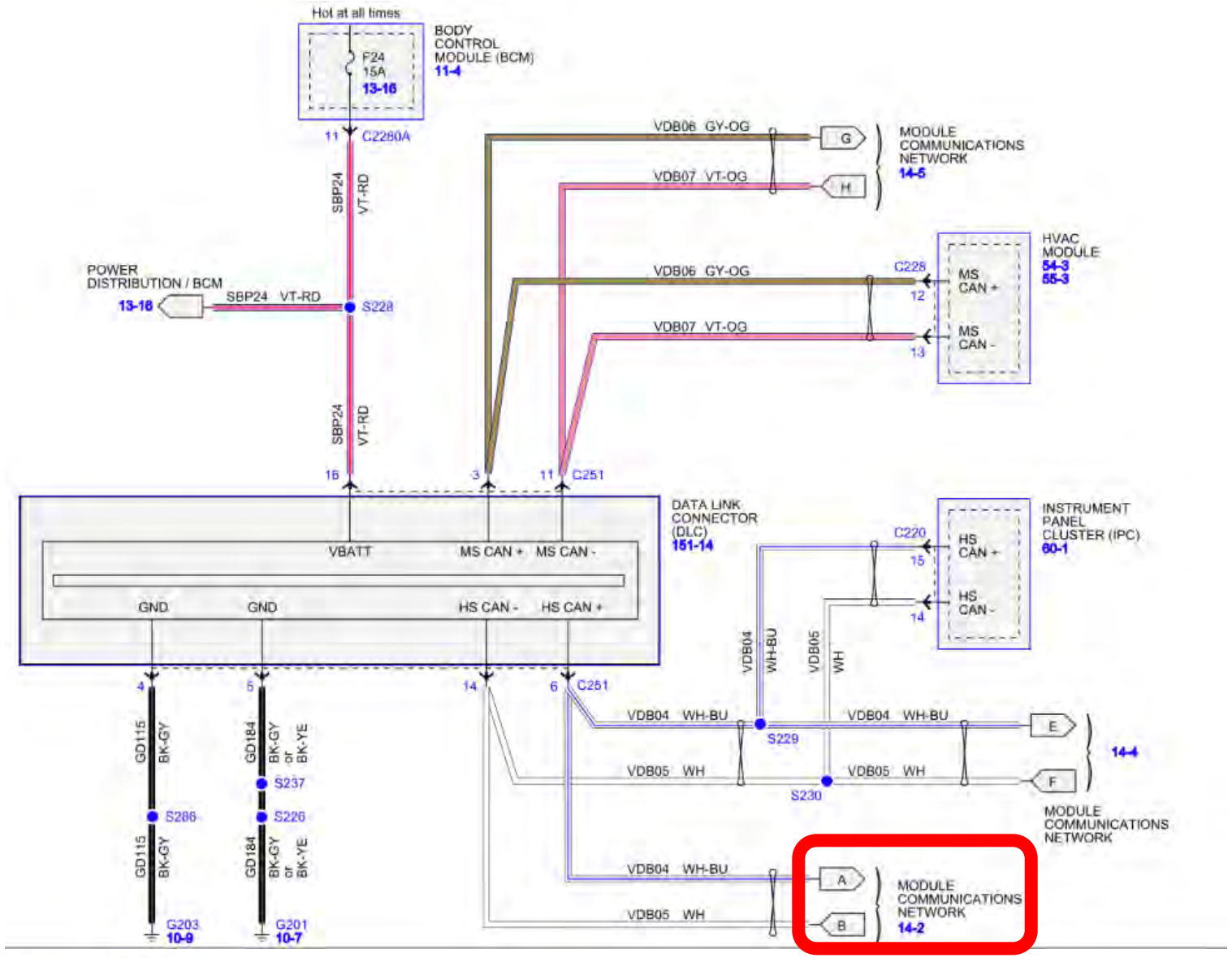

There are no “access” points that are easily accessible on this diagram, lets look forward and I’ll show you what we are looking for.

Build a Plan!

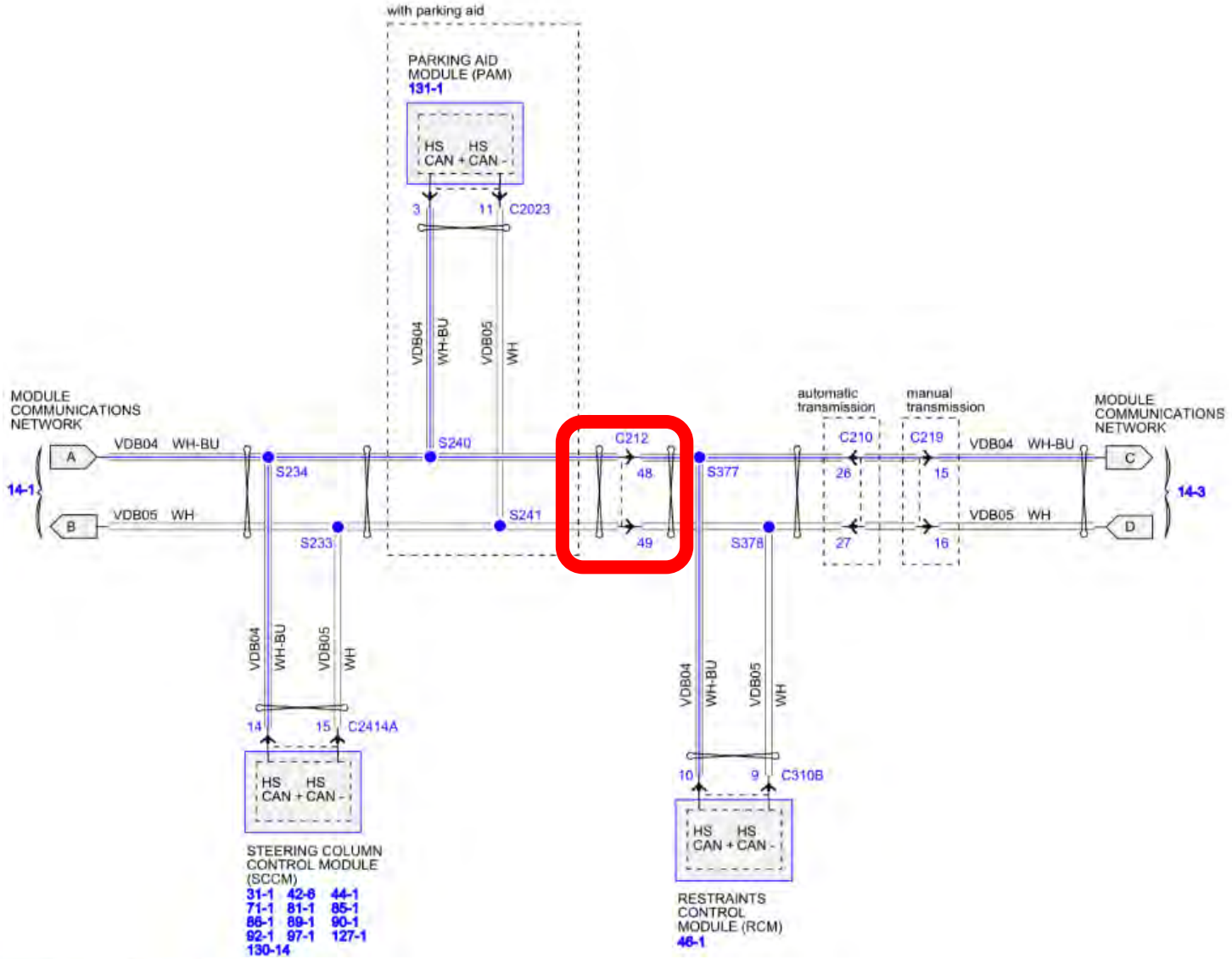

There are no "access" points that are easily accessible on this diagram, lets look forward and I'll show you what we are looking for.

Connector C212 is our first access point… where is it?

Build a Plan!

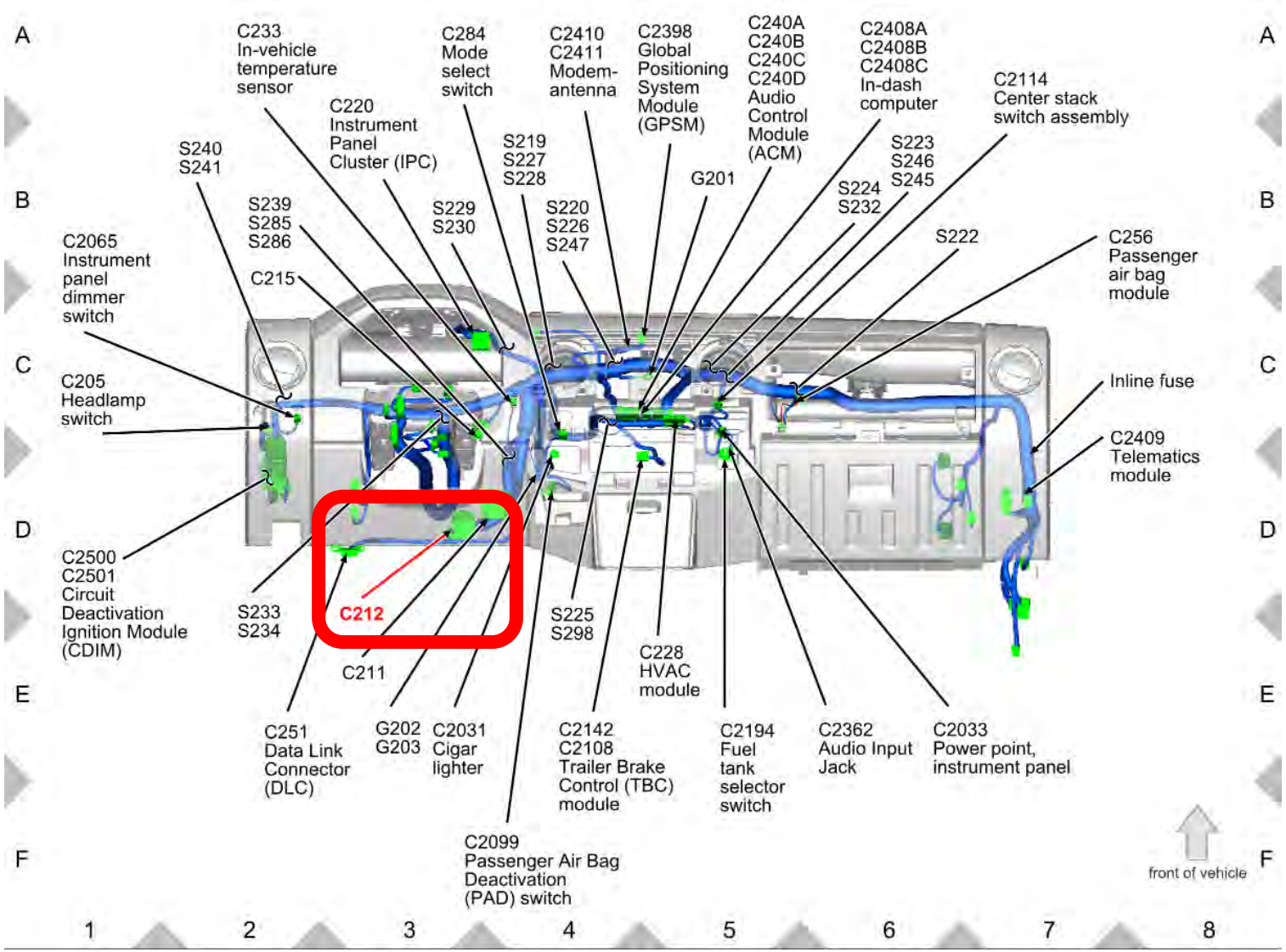

This looks easy to physically get to, what do we do with it?

Let's look closer.

Build a Plan!

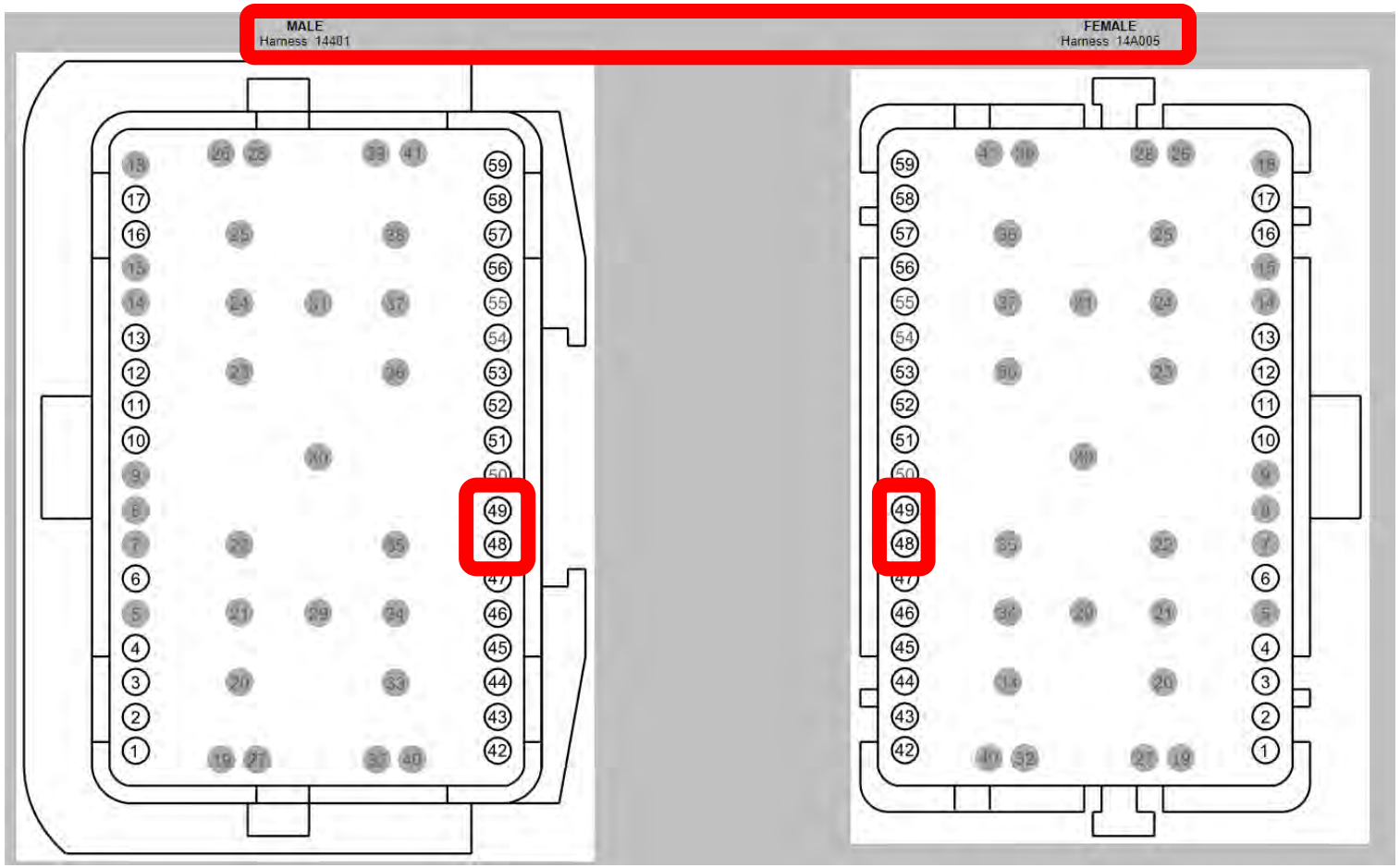

Looking at the pinout of the connector, we see our 2 network lines locations.

My personal test is to measure the resistance of the network on either side and see if we have 120 on either.

Build a Plan!

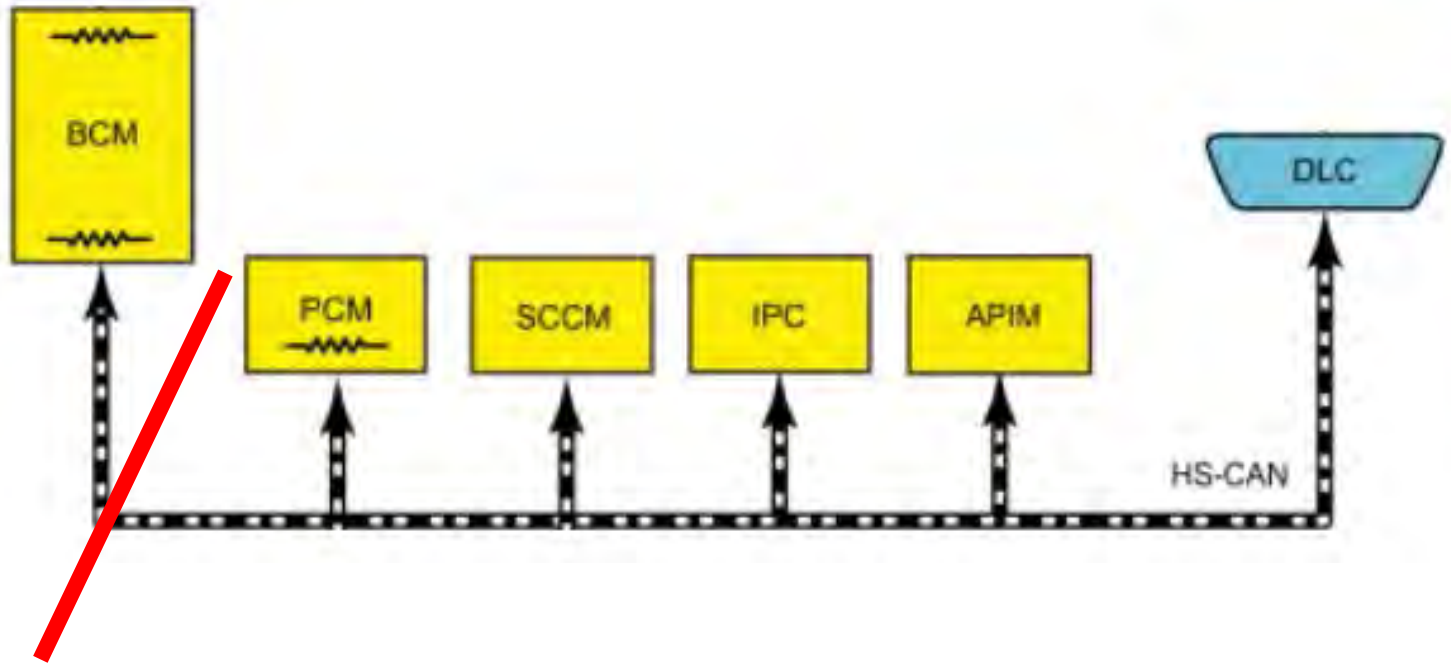

Essentially, a careful inspection of the location of the connector reveals, we have separated the terminating resistors on either side of the connector.

How can this help?

Build a Plan!

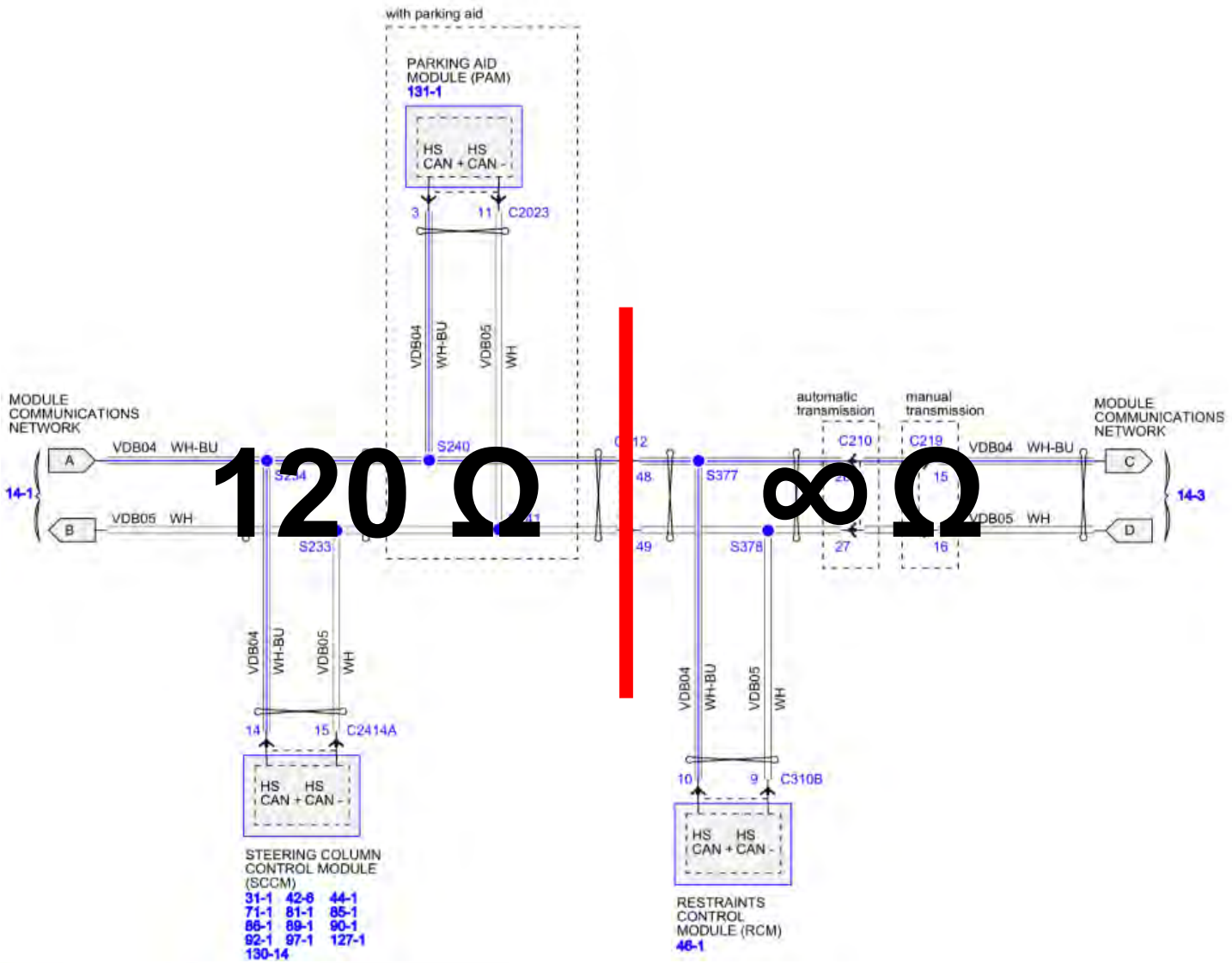

We can now see the side of the network with the issue..

At this point, we just continue down the line to isolate the concern even farther…..

But do we really need to?

Build a Plan!

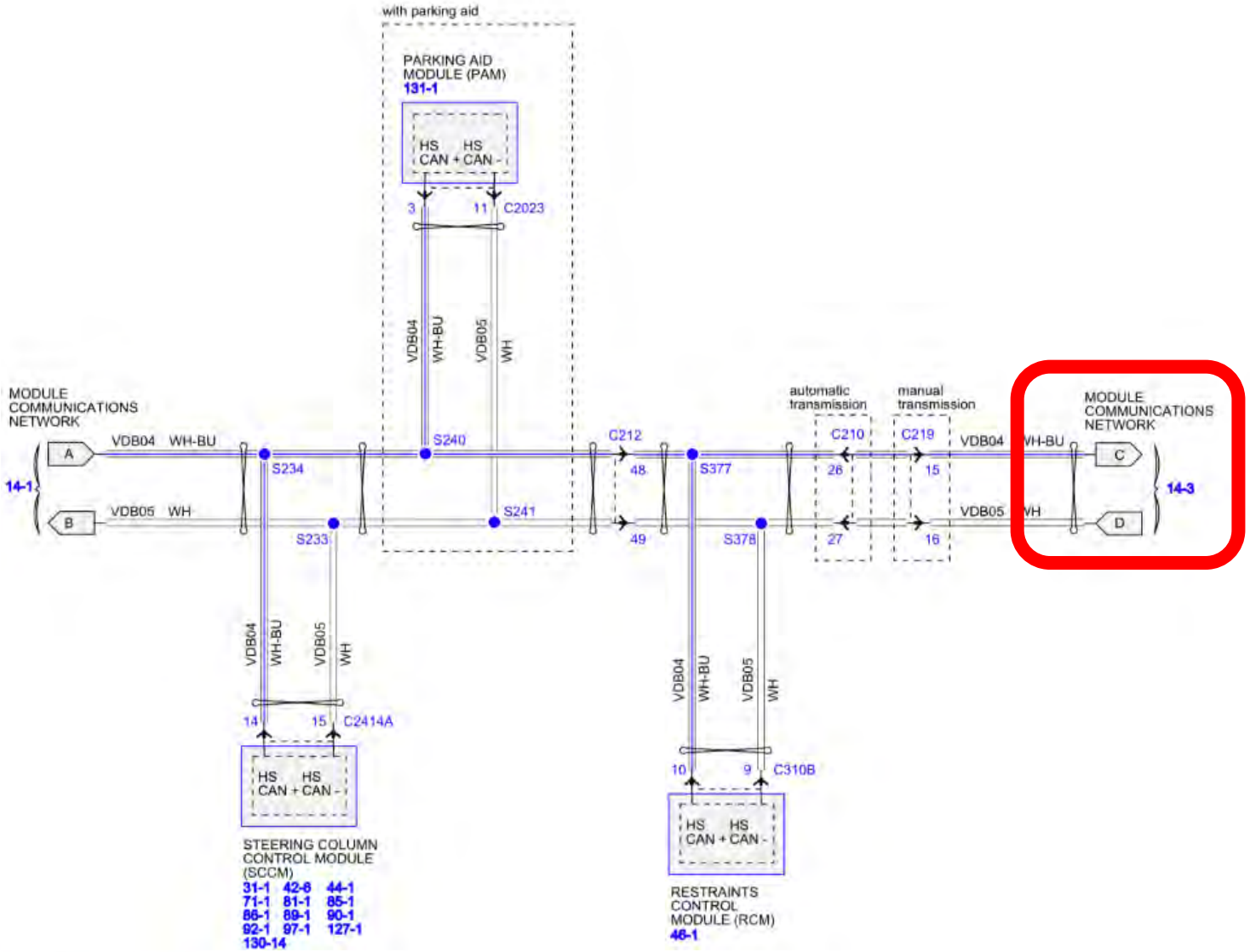

Look closer at the diagram..

Build a Plan!

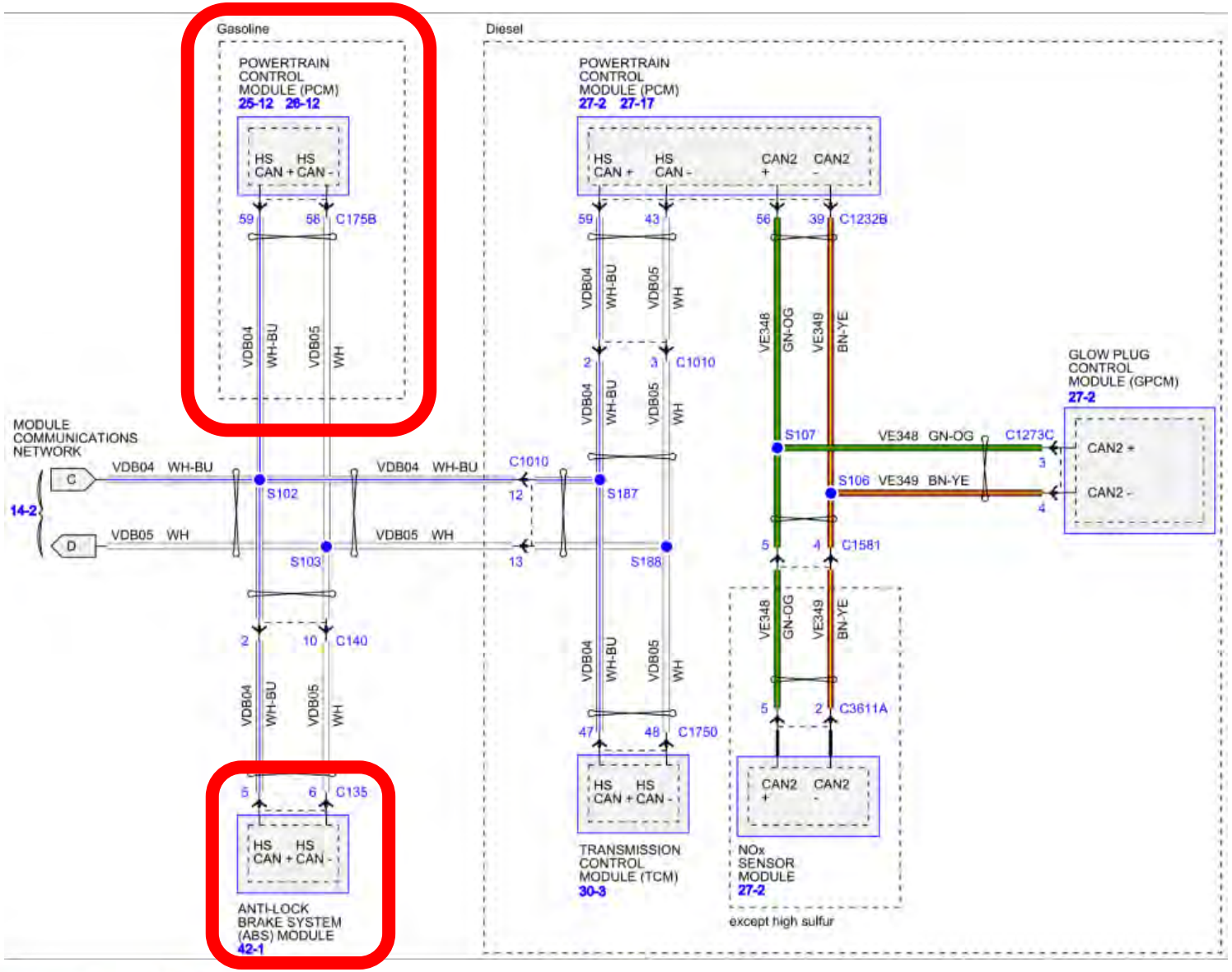

Look closer at the diagram..

What was our concern?

And where would we logically test?

2009 Chevrolet Silverado – Crank No Start

Mobile Call – Shop states,
No Communication with the FPCM*, no fuel pressure.

Crank No Start Condition

Daisy Chain Network Example

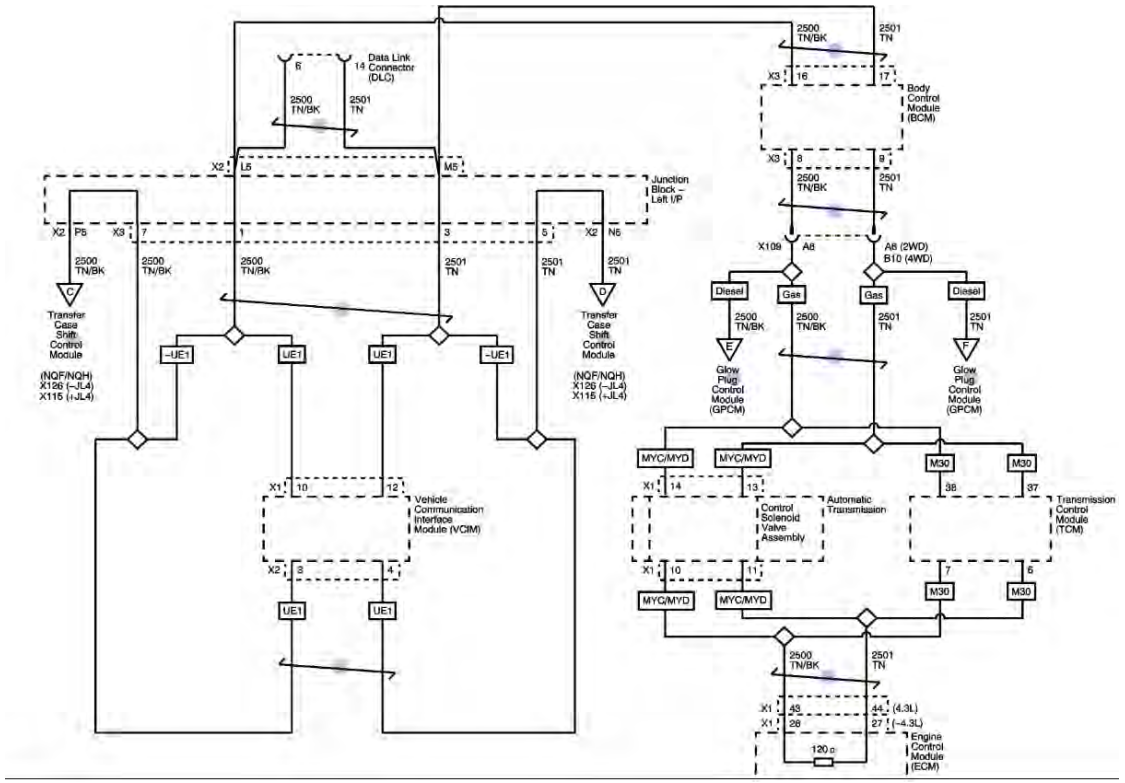

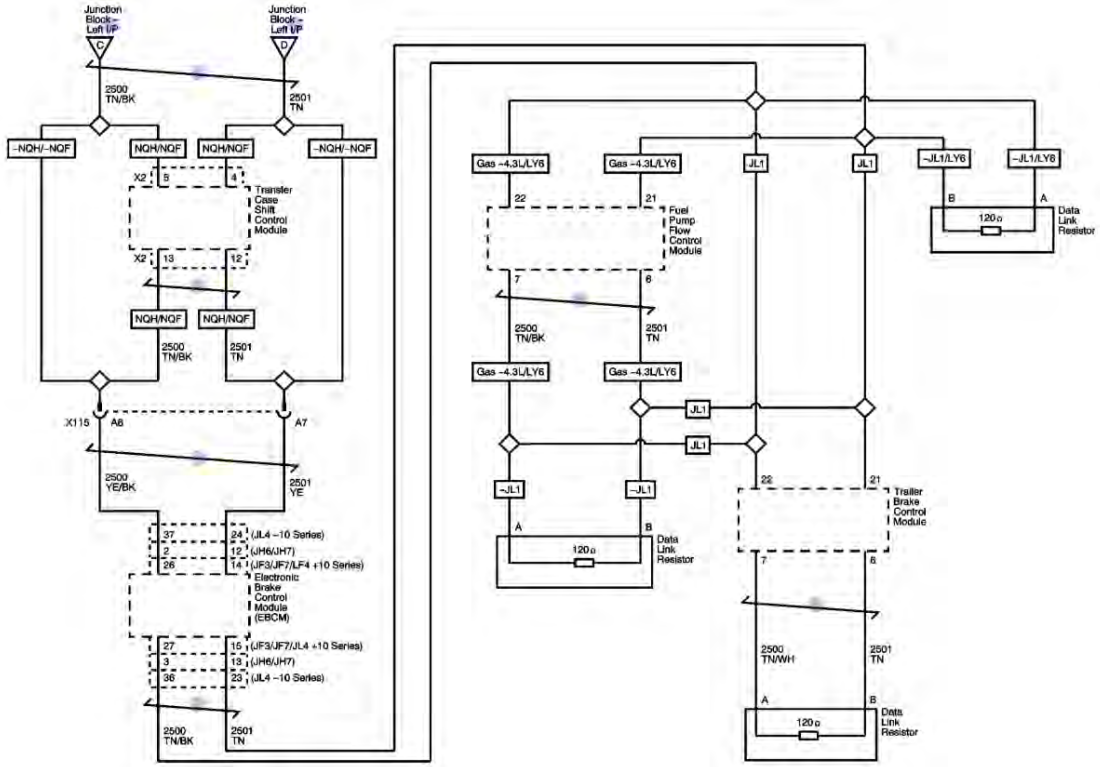

Daisy Chain Example

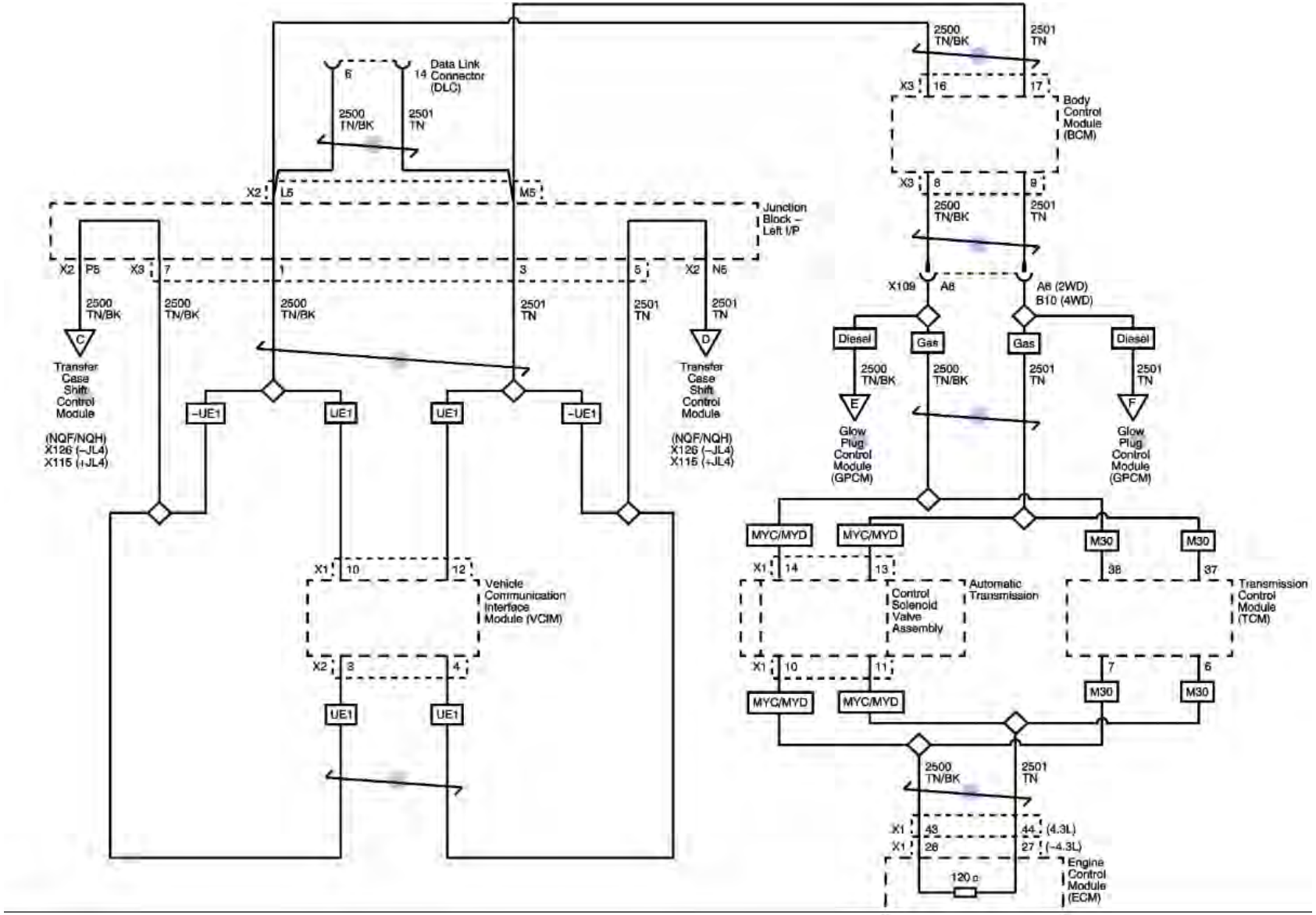

Page 1 of 2 for the High-Speed Network, on a Gasoline Non-"MEX" or "HP2" RPO code build vehicle Only!

A lot of wires to cover…

Can we make this easier to look at?

Physically or Mentally make the modifications to the wiring diagram….

Over time, it will become second nature.

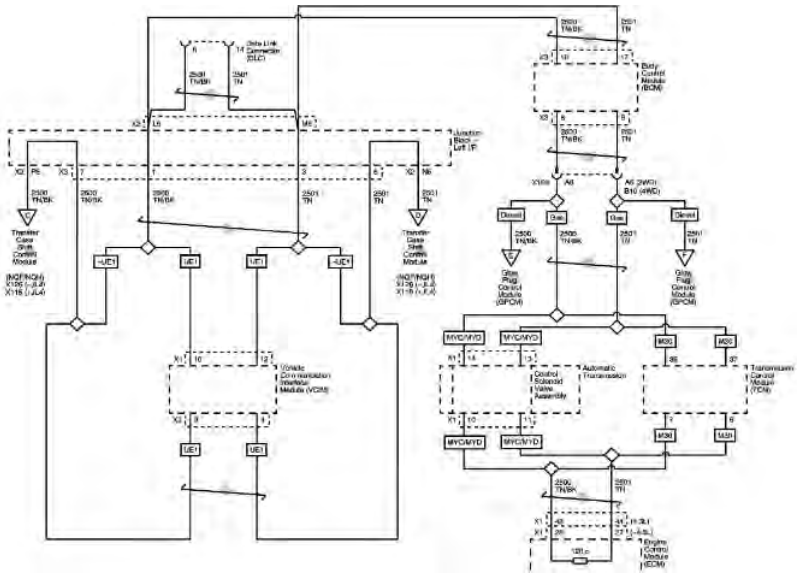

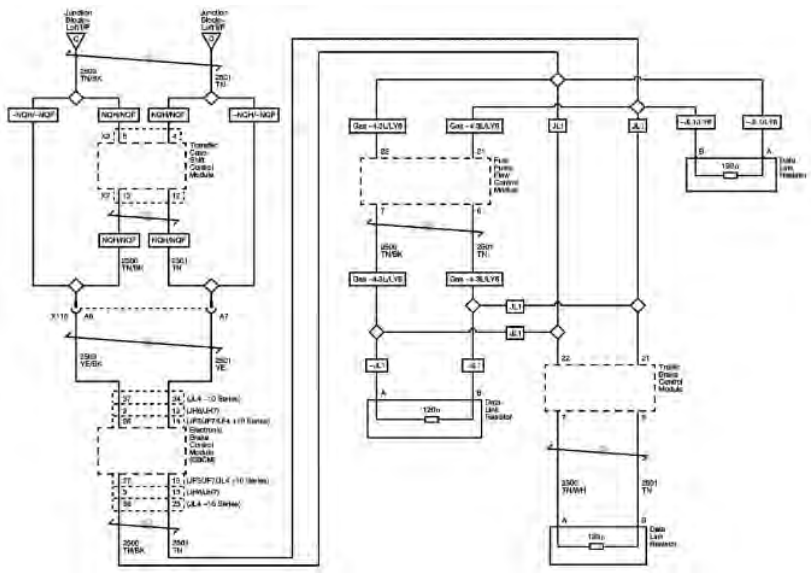

Put on our AESWave - Thinking Cap!

What's in The Network?

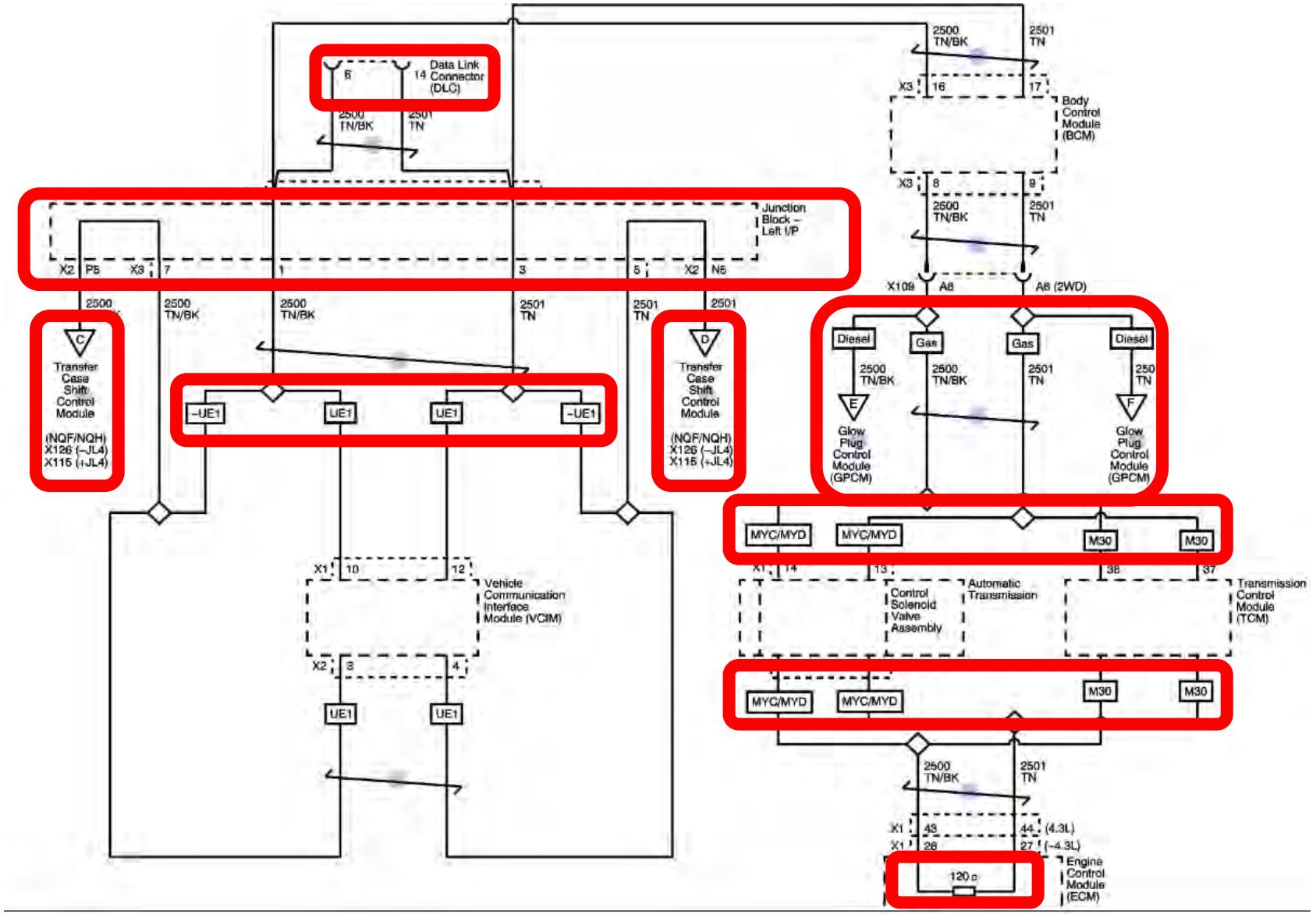

DLC is here

Junction Block is here

Continuation C & D is here

RPO options

More RPO options

1 Terminating Resistor

What's in The Network? Cont…

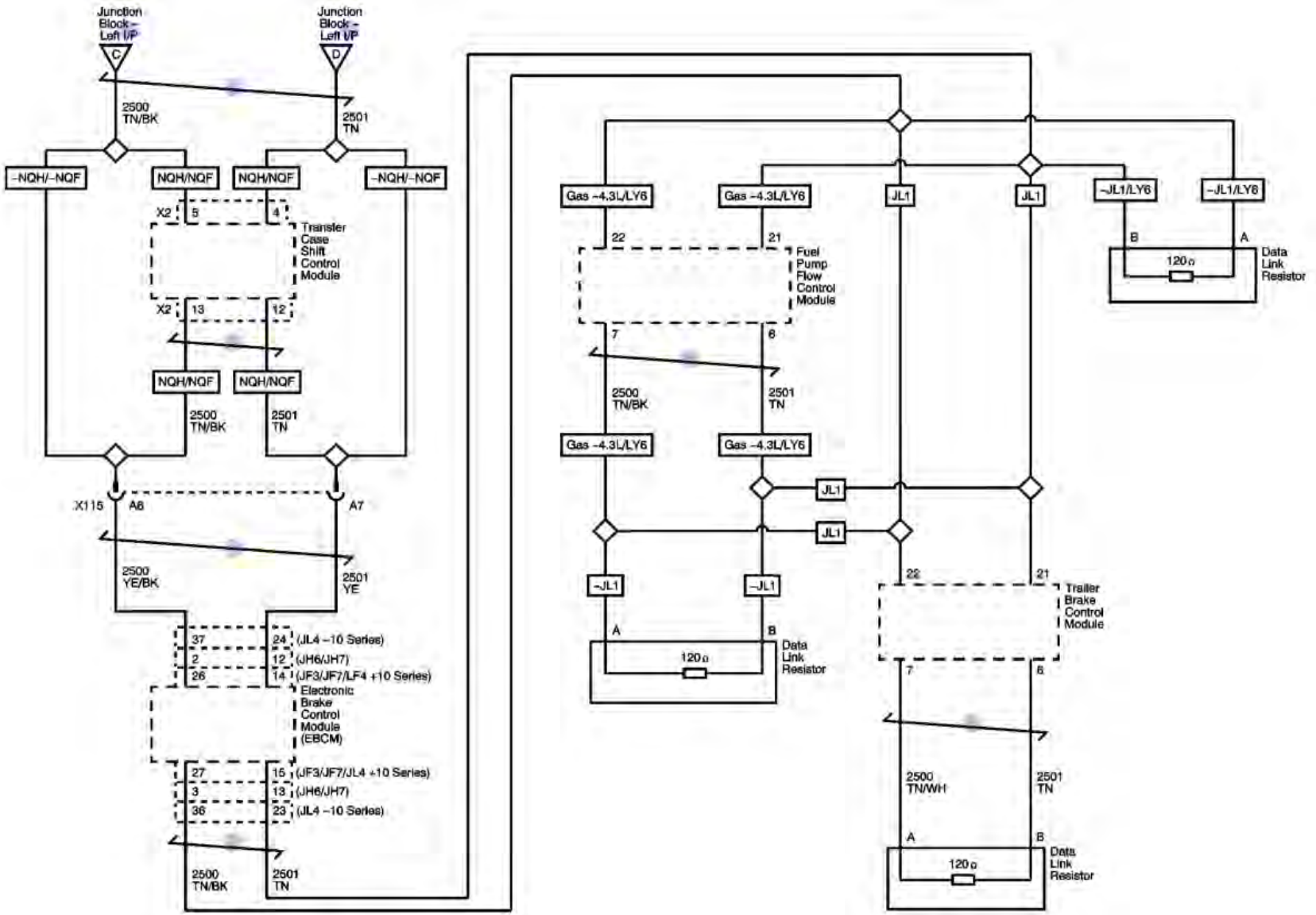

Page 2 of 2 for the High-Speed Network, on a Gasoline Non-"MEX" or "HP2" RPO code build vehicle Only!

What's in The Network?

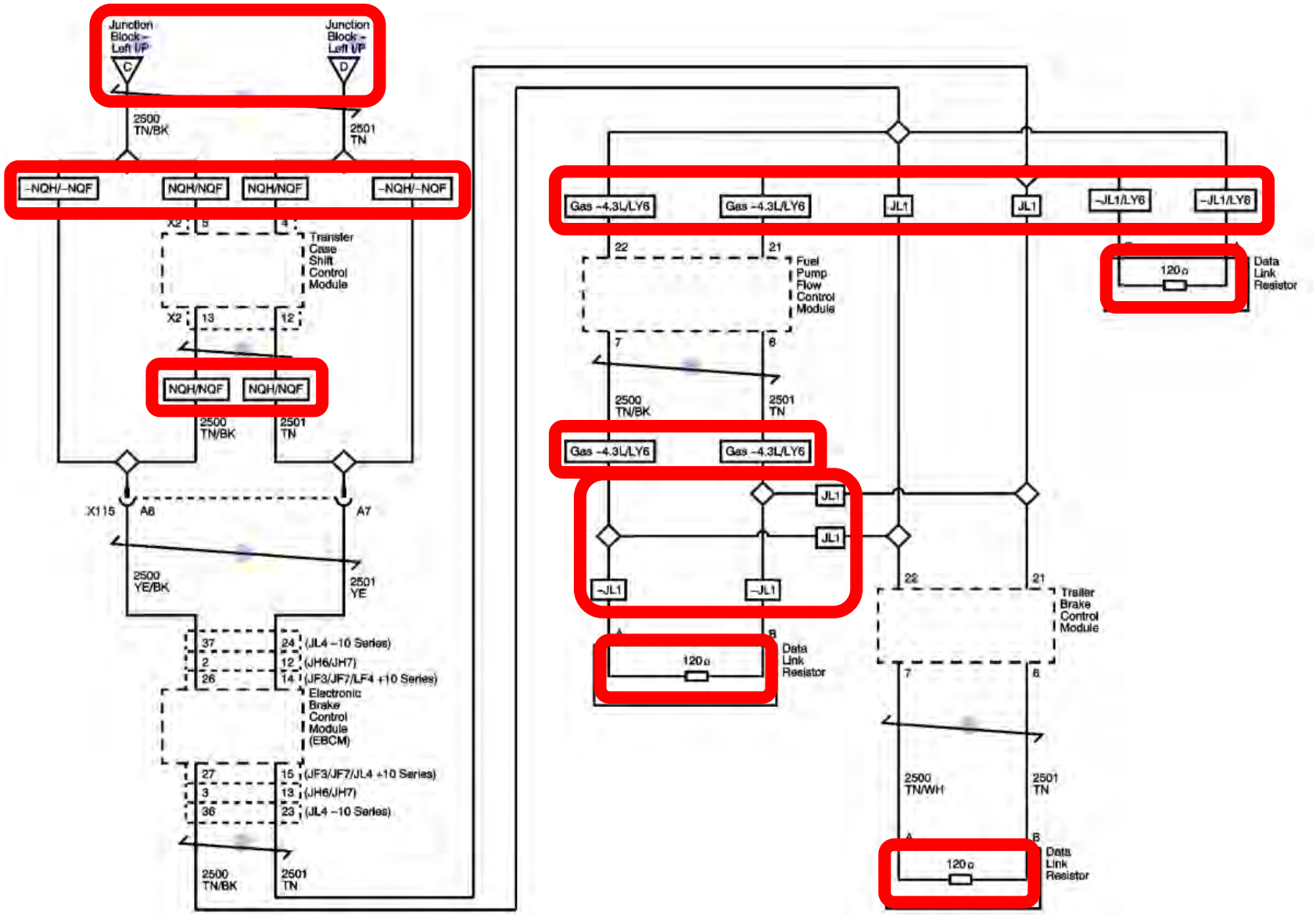

- Continuation of C & D
- Other RPO Options
- Possible Terminating Resistor #2 Locations

What's in The Network?

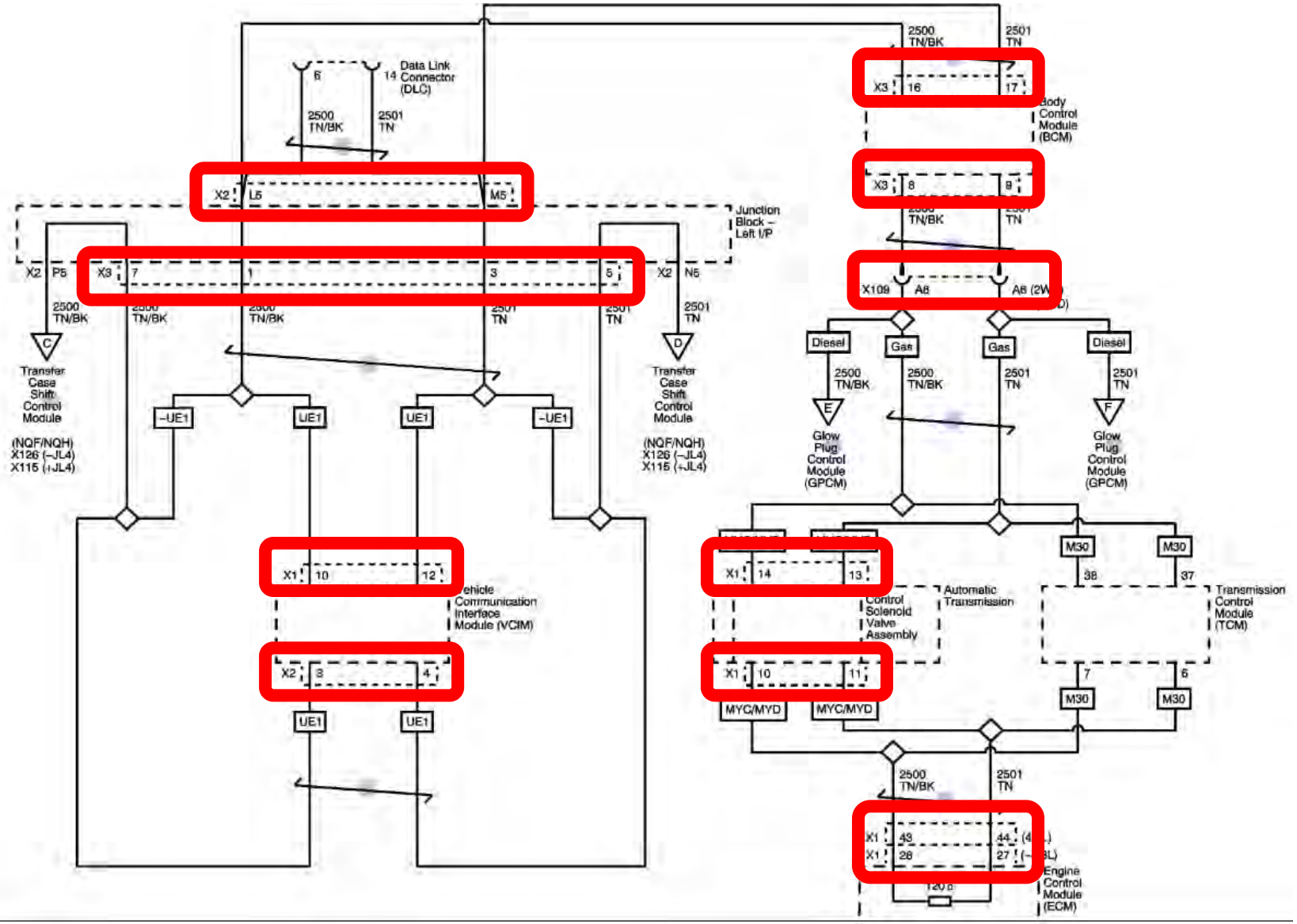

What else in our wiring diagram can we use to our advantage while building our test plan?

Connectors!

What's in The Network?

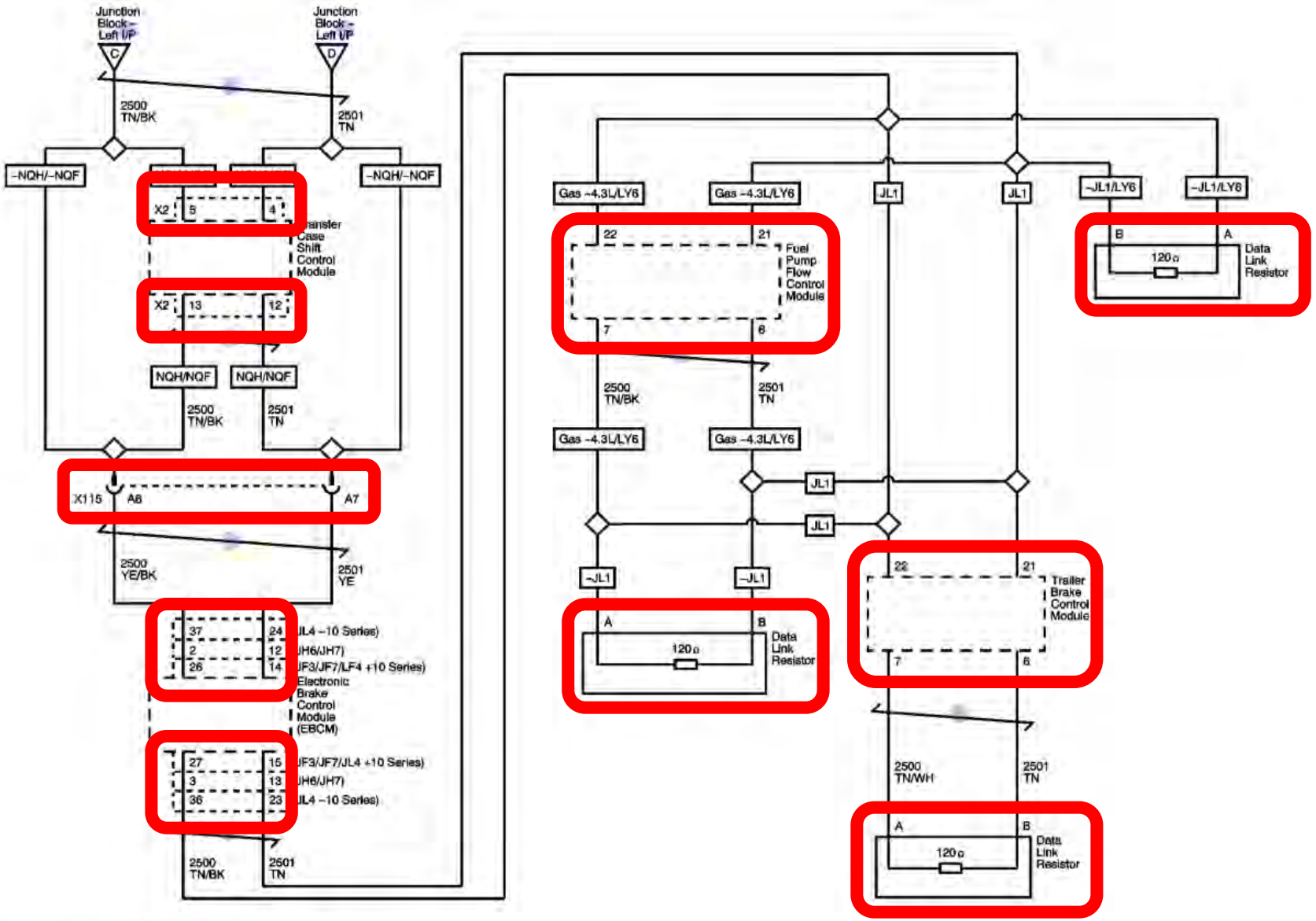

Connectors!

2014 Dodge Avenger

Reason for Customer's Visit

They installed a replacement PCM from rockauto because they were having transmission shifting issues and said they could reset it and it and would act normal for a while. but now vehicle will not start and they want it programmed.

Customer states that the original is in the trunk.

Primary use of vehicle: N/A

PreScan Topology

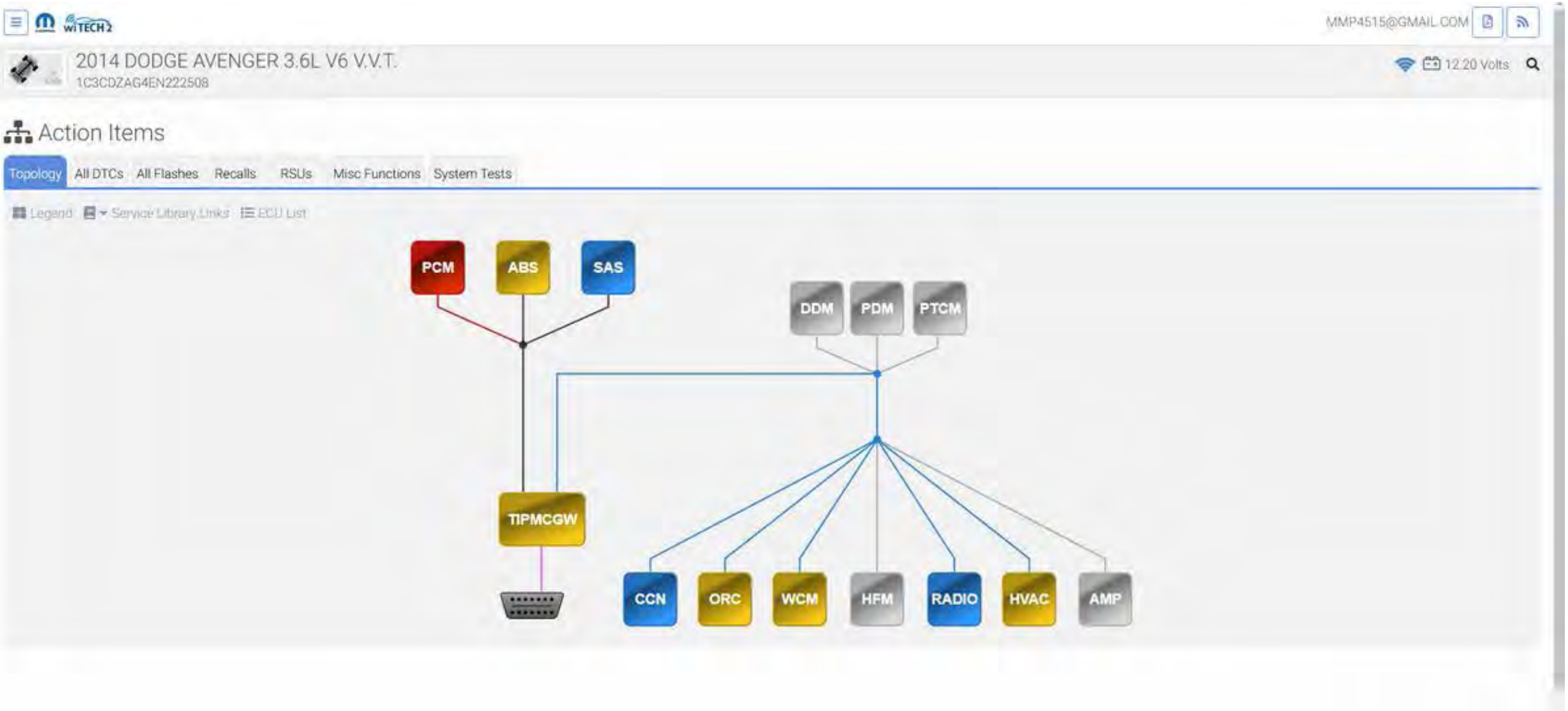

PreScan DTCs

ECU	CODE	DESCRIPTION	STATUS
ORC	B1B02	Driver Airbag Squib 1 Circuit Open	Active
ORC	U0019	CAN B Bus	Stored
ORC	B212C	Ignition Run/Start Input Circuit Open	Stored
ORC	B210D	Battery Voltage Low	Stored
HVAC	B210A-84	System Voltage Low-Signal Below Allowable Range	Stored
HVAC	B210D-84	Battery Voltage Low-Signal Below Allowable Range	Stored
ABS	C2100	Battery Voltage Low	Stored
ABS	C2202	Original VIN Mismatch/Missing	Active
ABS	U0100	Lost Communication With ECM/PCM "A"	Active
ABS	U140E	Implausible Vehicle Configuration Data Received	Active
WCM	C0077	Low Tire Pressure	Active
WCM	B210A	System Voltage Low	Stored
WCM	B210D	Battery Voltage Low	Stored
WCM	B1A25	Invalid Key	Stored
WCM	U0141	Lost Communication With IPM (FCM/TIPM)	Stored
TIPMCGW	B165E	Park Lamp Control Circuit Open	Stored
TIPMCGW	U0024	CAN B Bus (-) Circuit Open	Stored
TIPMCGW	B210D	Battery Voltage Low	Stored
TIPMCGW	P128D	TCM Power Control Circuit 2 Open	Stored

Post Connector & Bale Repair

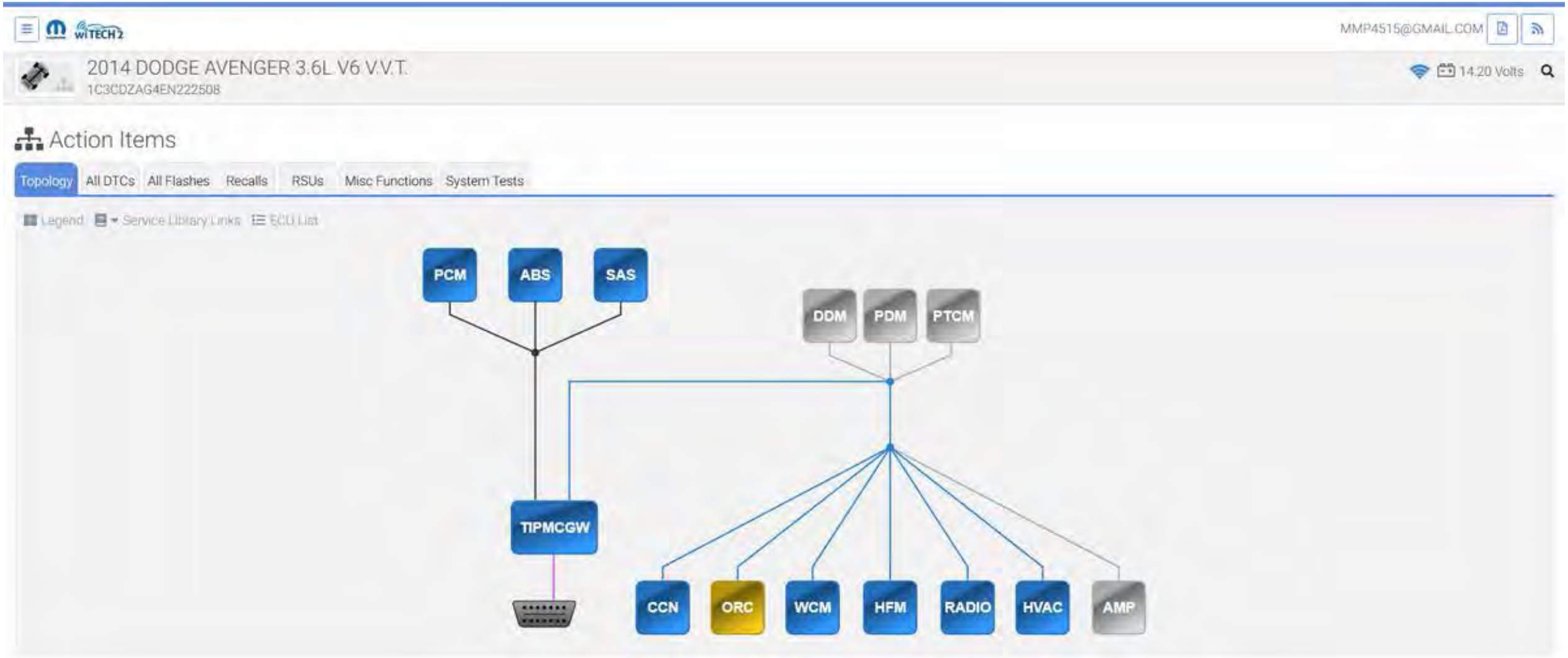

2020 Ford F250

2020 Ford F250

Initial Diagnosis

Client states that the turn signals are not working, not indicating on dash also not in the IPC but the hazards are operational, no buttons on steering wheel working, lots of lights on dash, and automatic running boards do not come down, windshield wipers are not functional, front and rear surround view cameras not working even when in reverse. Please diagnose and advise.

PreScan DTCs

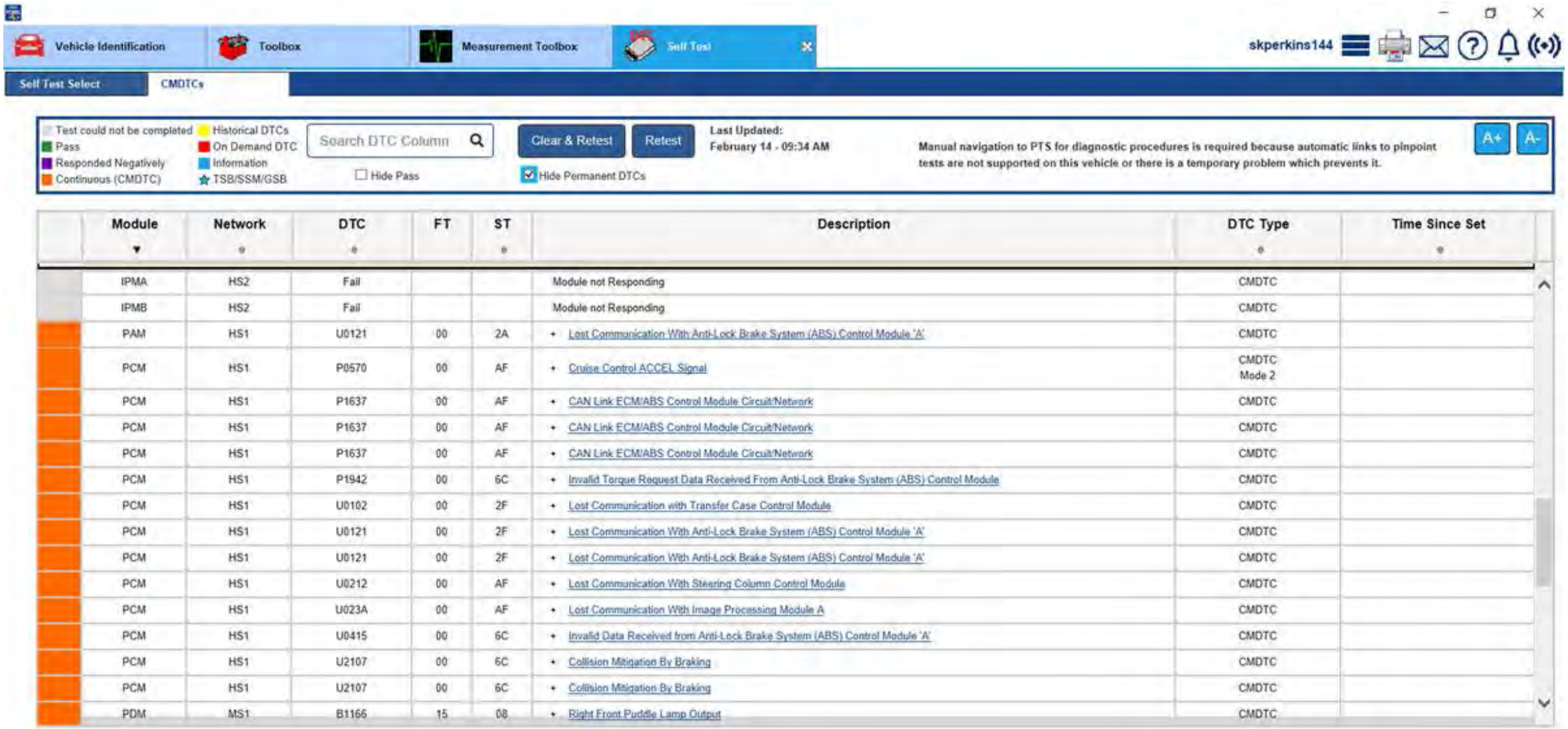

Module	Network	DTC	FT	ST	Description	DTC Type	Time Since Set
IPMA	HS2	Fail			Module not Responding	CMDTC	
IPMB	HS2	Fail			Module not Responding	CMDTC	
PAM	HS1	U0121	00	2A	Lost Communication With Anti-Lock Brake System (ABS) Control Module 'A'	CMDTC	
PCM	HS1	P0570	00	AF	Cruise Control ACCEL Signal	CMDTC Mode 2	
PCM	HS1	P1637	00	AF	CAN Link ECM/ABS Control Module Circuit/Network	CMDTC	
PCM	HS1	P1637	00	AF	CAN Link ECM/ABS Control Module Circuit/Network	CMDTC	
PCM	HS1	P1637	00	AF	CAN Link ECM/ABS Control Module Circuit/Network	CMDTC	
PCM	HS1	P1942	00	6C	Invalid Torque Request Data Received From Anti-Lock Brake System (ABS) Control Module	CMDTC	
PCM	HS1	U0102	00	2F	Lost Communication with Transfer Case Control Module	CMDTC	
PCM	HS1	U0121	00	2F	Lost Communication With Anti-Lock Brake System (ABS) Control Module 'A'	CMDTC	
PCM	HS1	U0121	00	2F	Lost Communication With Anti-Lock Brake System (ABS) Control Module 'A'	CMDTC	
PCM	HS1	U0212	00	AF	Lost Communication With Steering Column Control Module	CMDTC	
PCM	HS1	U023A	00	AF	Lost Communication With Image Processing Module A	CMDTC	
PCM	HS1	U0415	00	6C	Invalid Data Received from Anti-Lock Brake System (ABS) Control Module 'A'	CMDTC	
PCM	HS1	U2107	00	6C	Collision Mitigation By Braking	CMDTC	
PCM	HS1	U2107	00	6C	Collision Mitigation By Braking	CMDTC	
PDM	MS1	B1166	15	08	Right Front Puddle Lamp Output	CMDTC	

Live Network Test

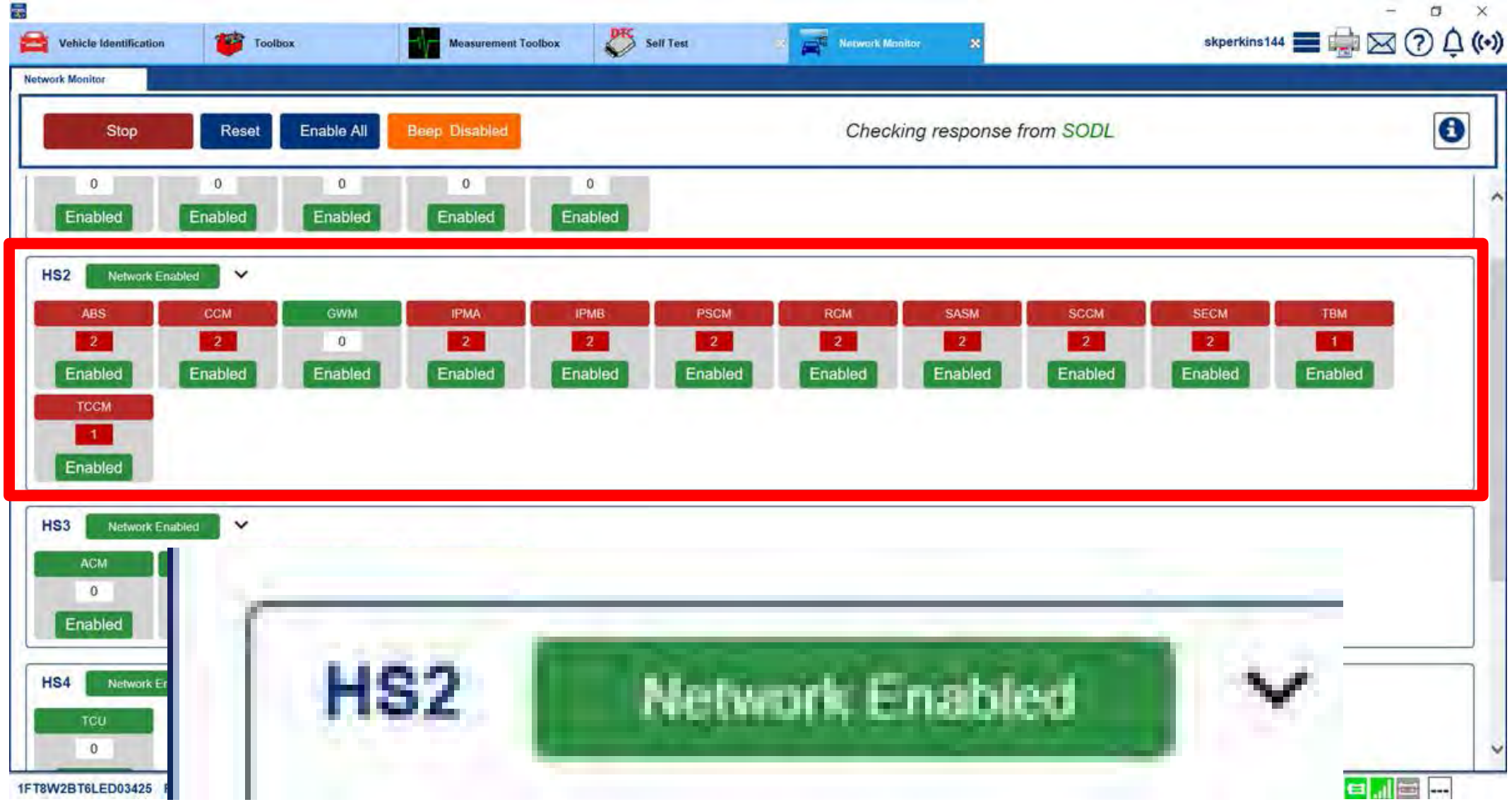

Base Line Resistance Test

TECH NOTES:

Disconnected gateway and checked resistance at back of gateway connector, found 2.7 ohms. Network lines are shorted somewhere on HS CAN2, will need additional time to trace short.

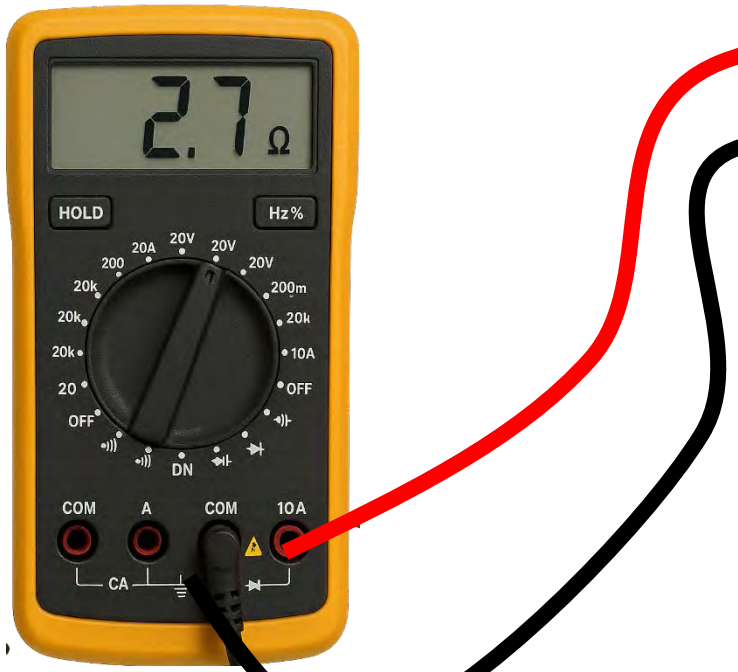

Network Research

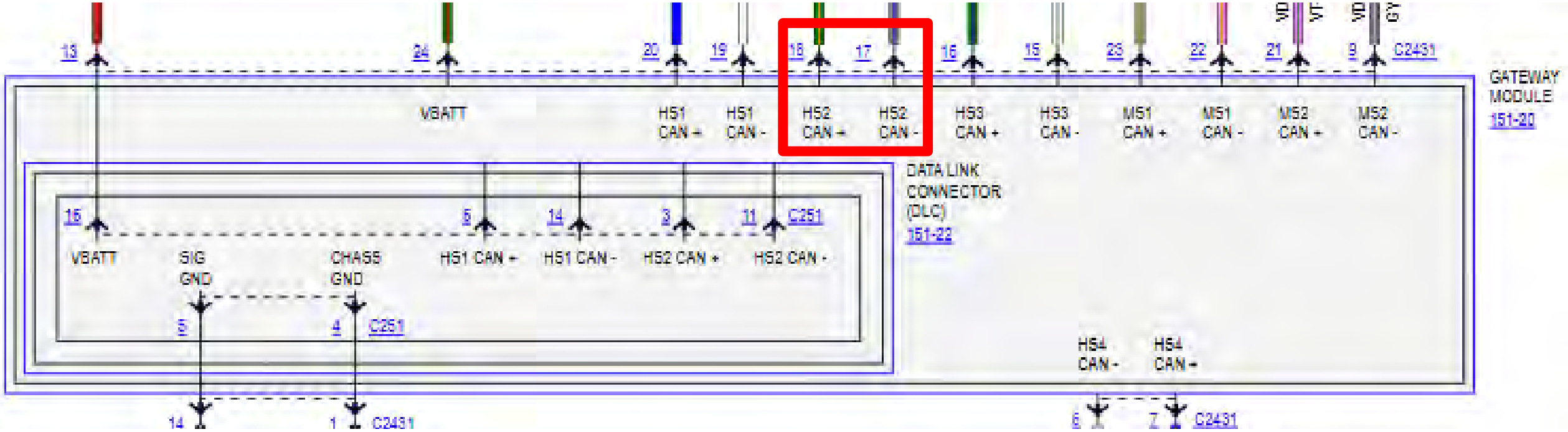

Network Research

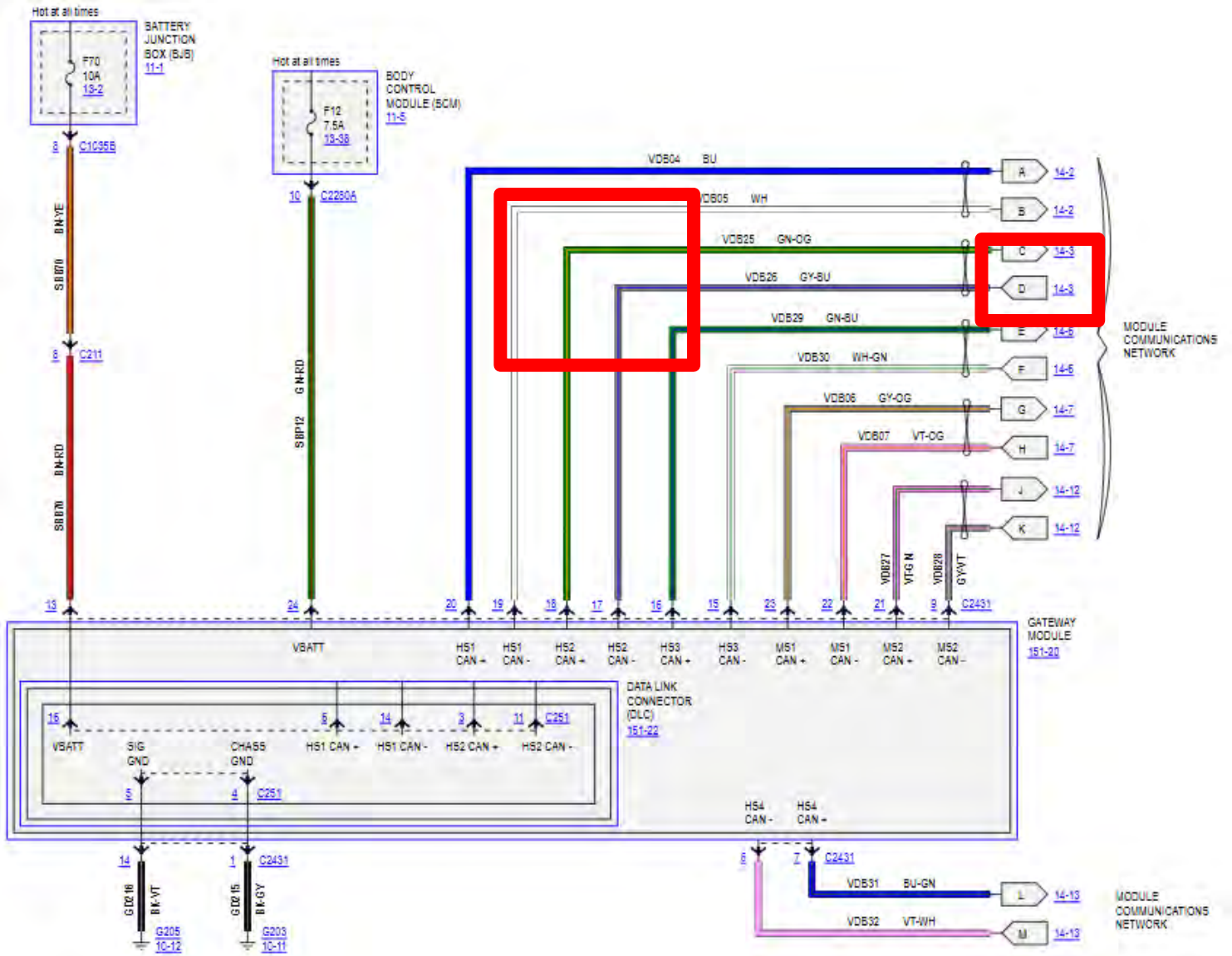

Network Research

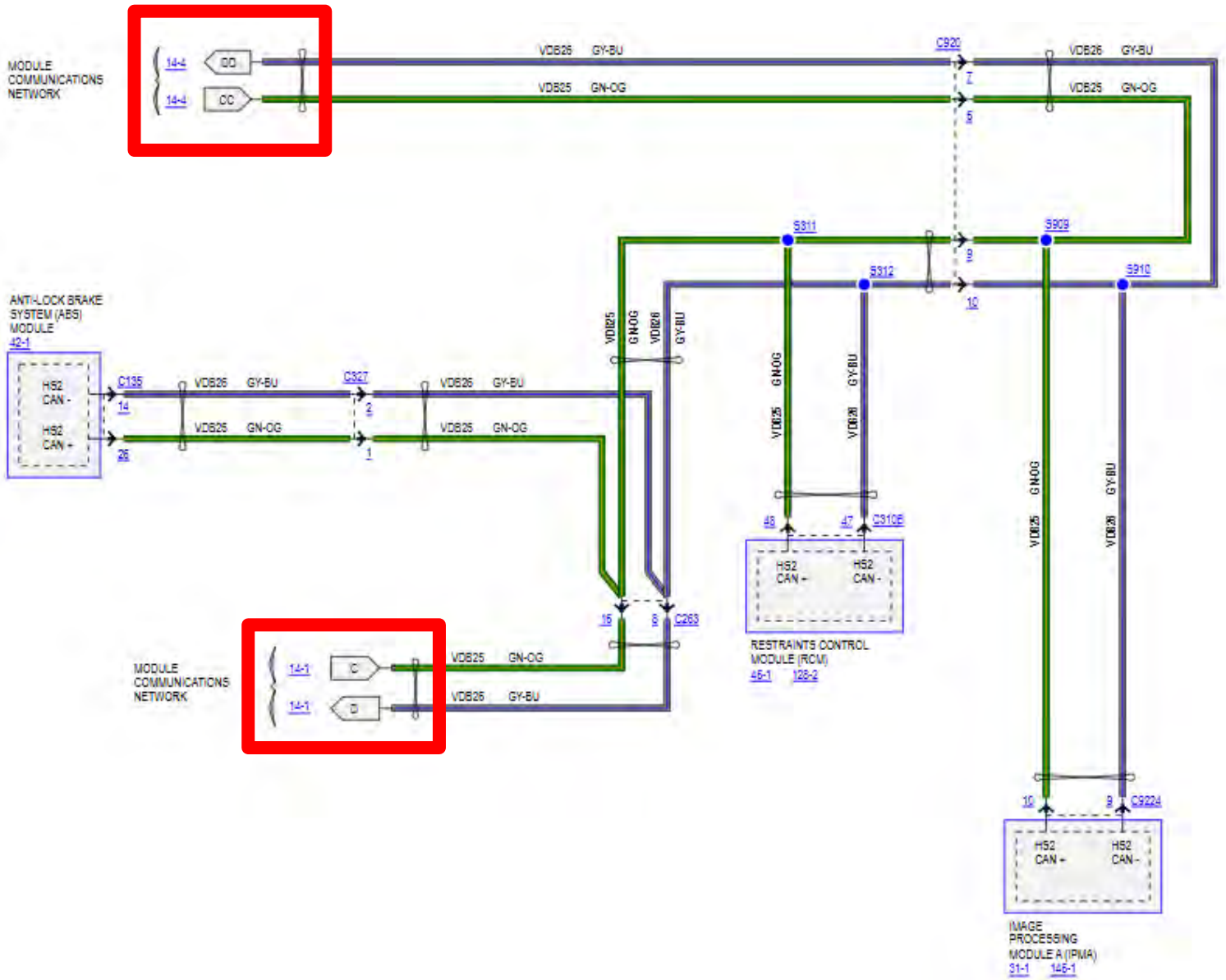

Network Research

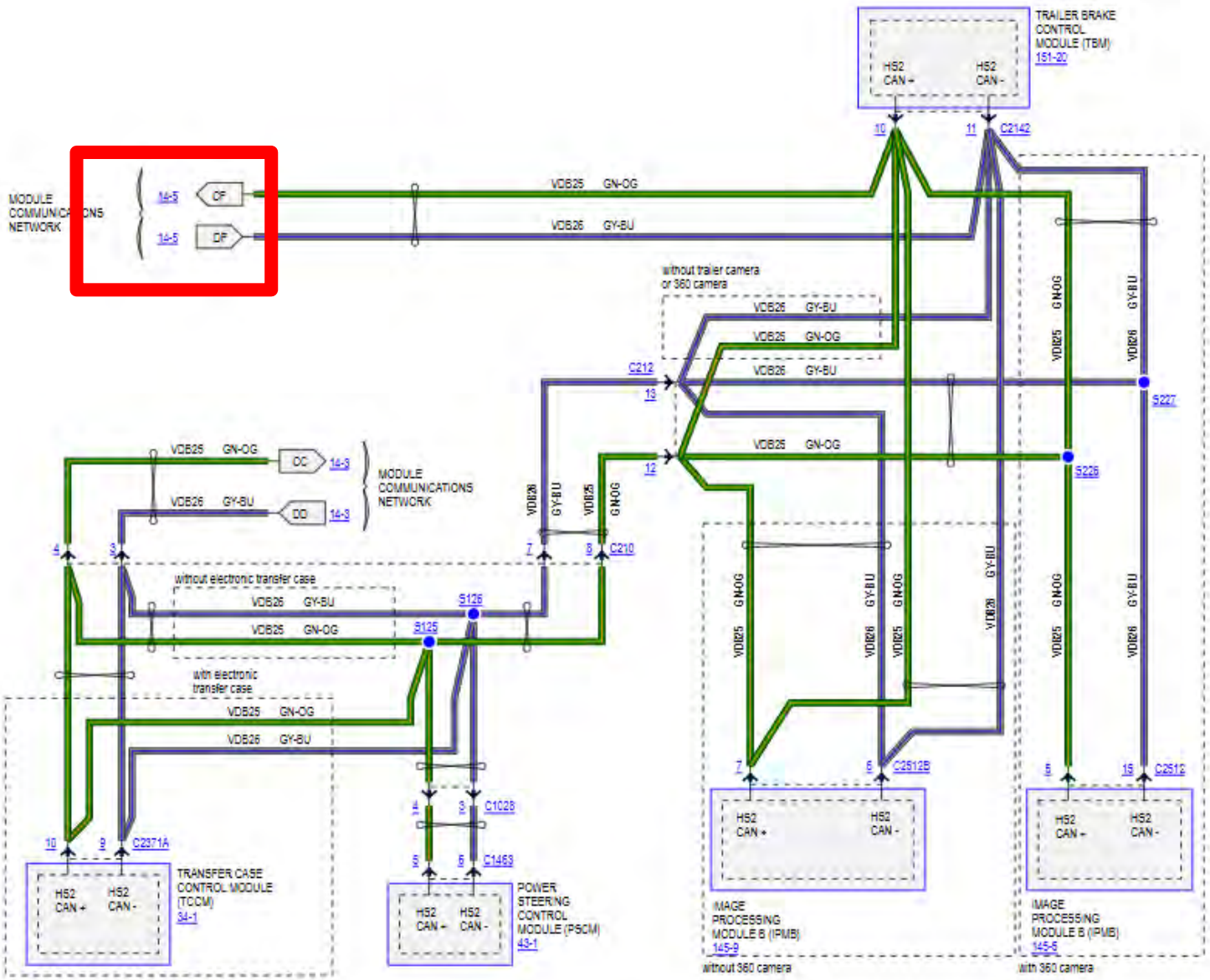

Isolation Method is Viable Here

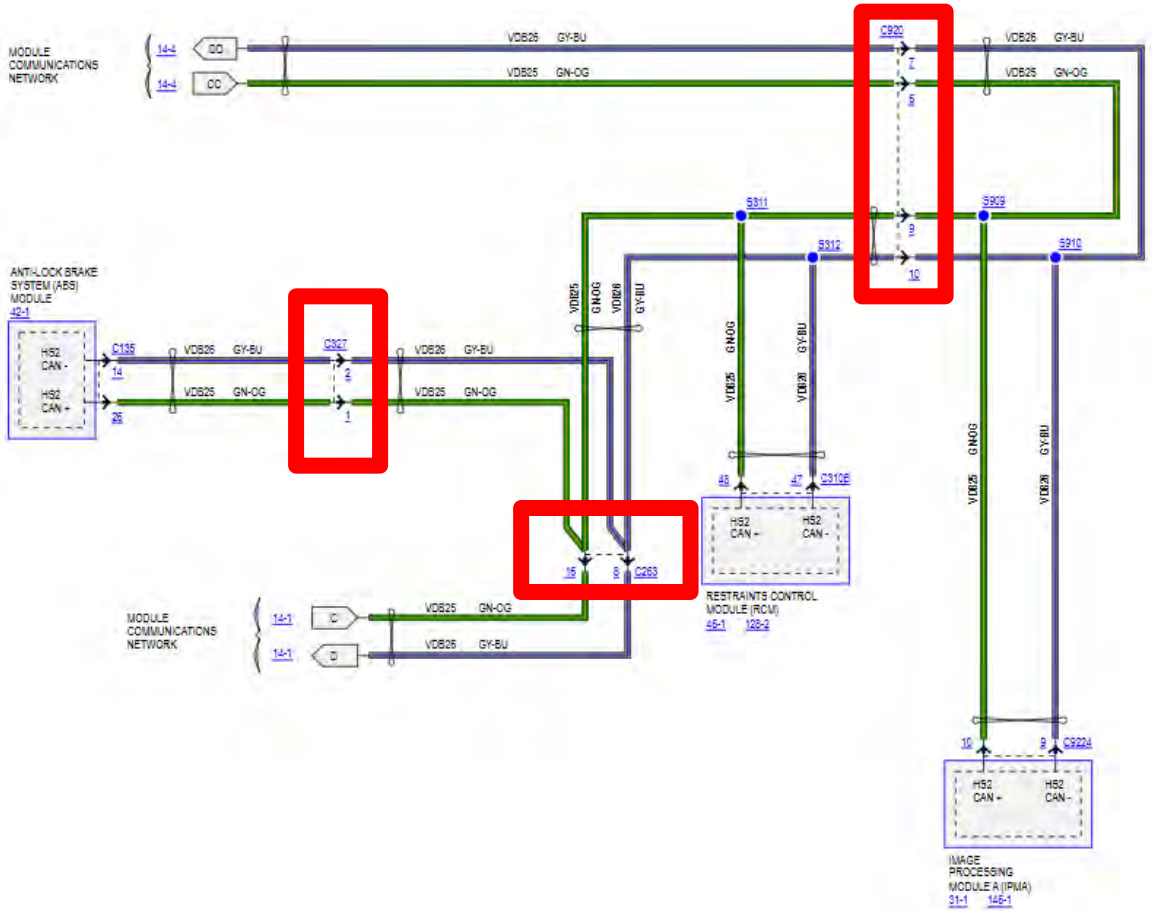

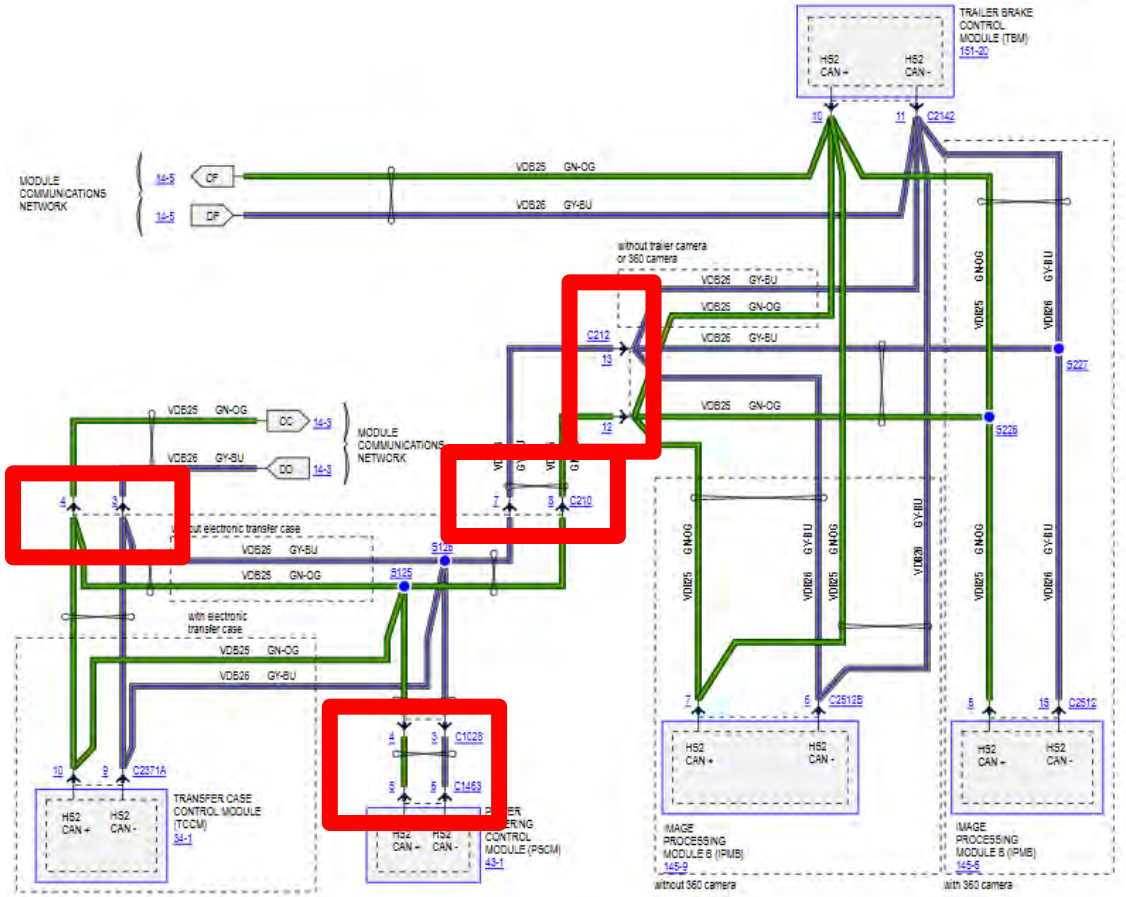

Post Repair

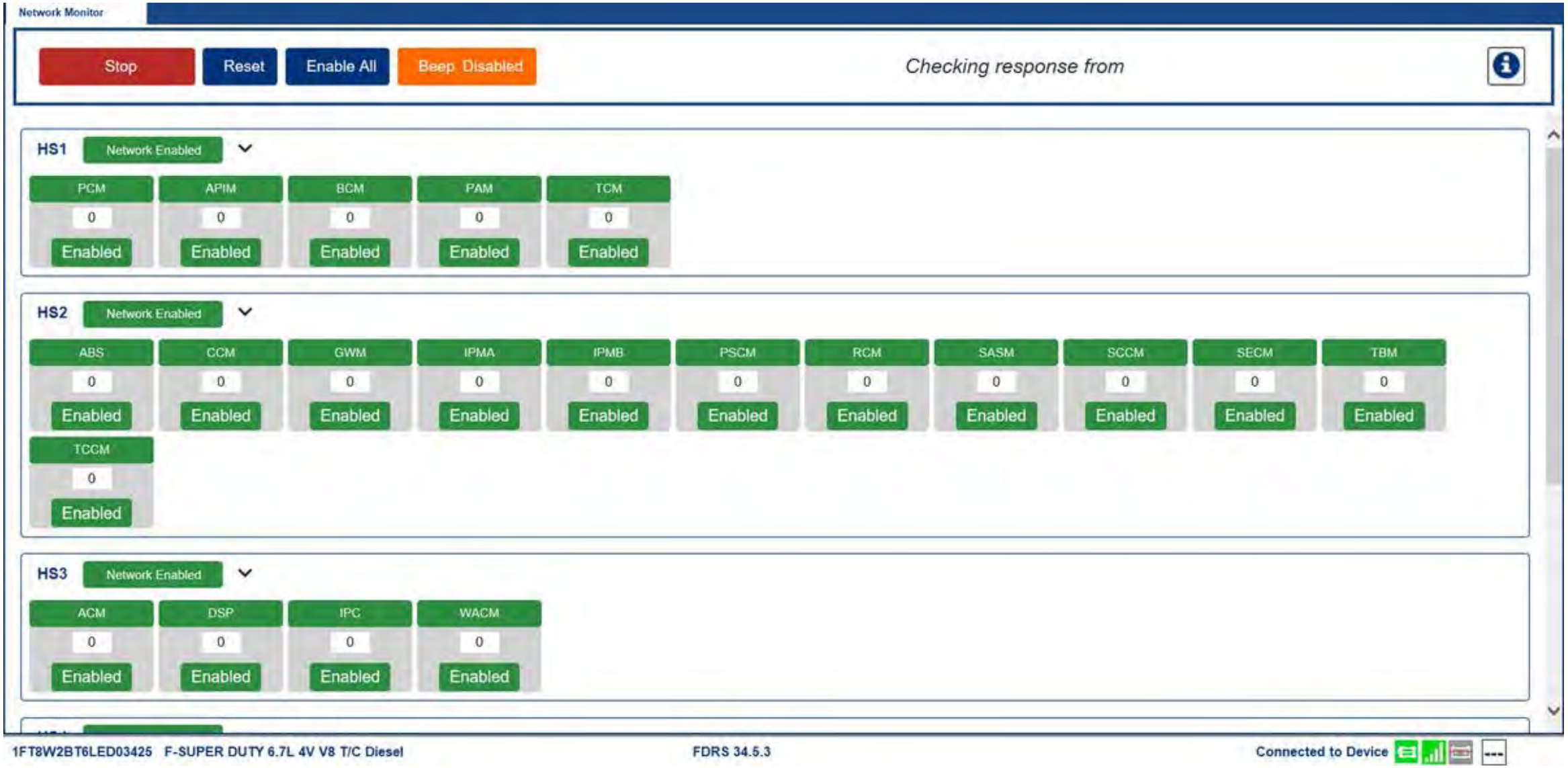
Network Monitor
Stop
Reset
Enable All
Beep Disabled
Checking response from
HS1
Network Enabled
PCM
APIM
BCM
PAM
TCM
HS2
Network Enabled
ABS
CCM
GWM
IPMA
IPMB
PSCM
RCM
SASM
SCCM
SECM
TBM
TCCM
HS3
Network Enabled
ACM
DSP
IPC
WACM
Enabled
1FT8W2BT6LED03425 F-SUPER DUTY 6.7L 4V V8 T/C Diesel
FDRS 34.5.3
Connected to Device

2013 Ford F-150 Platinum

- **Highly repeatable**
- First ignition cycle, the vehicle would start & run.
- Turning the key off and cycling it again usually created a **no crank, no start condition**. May require 4 or 5 key cycles.
- **Opening and closing** the driver's door would “**Reset**” the cycle.

Pre-Scan

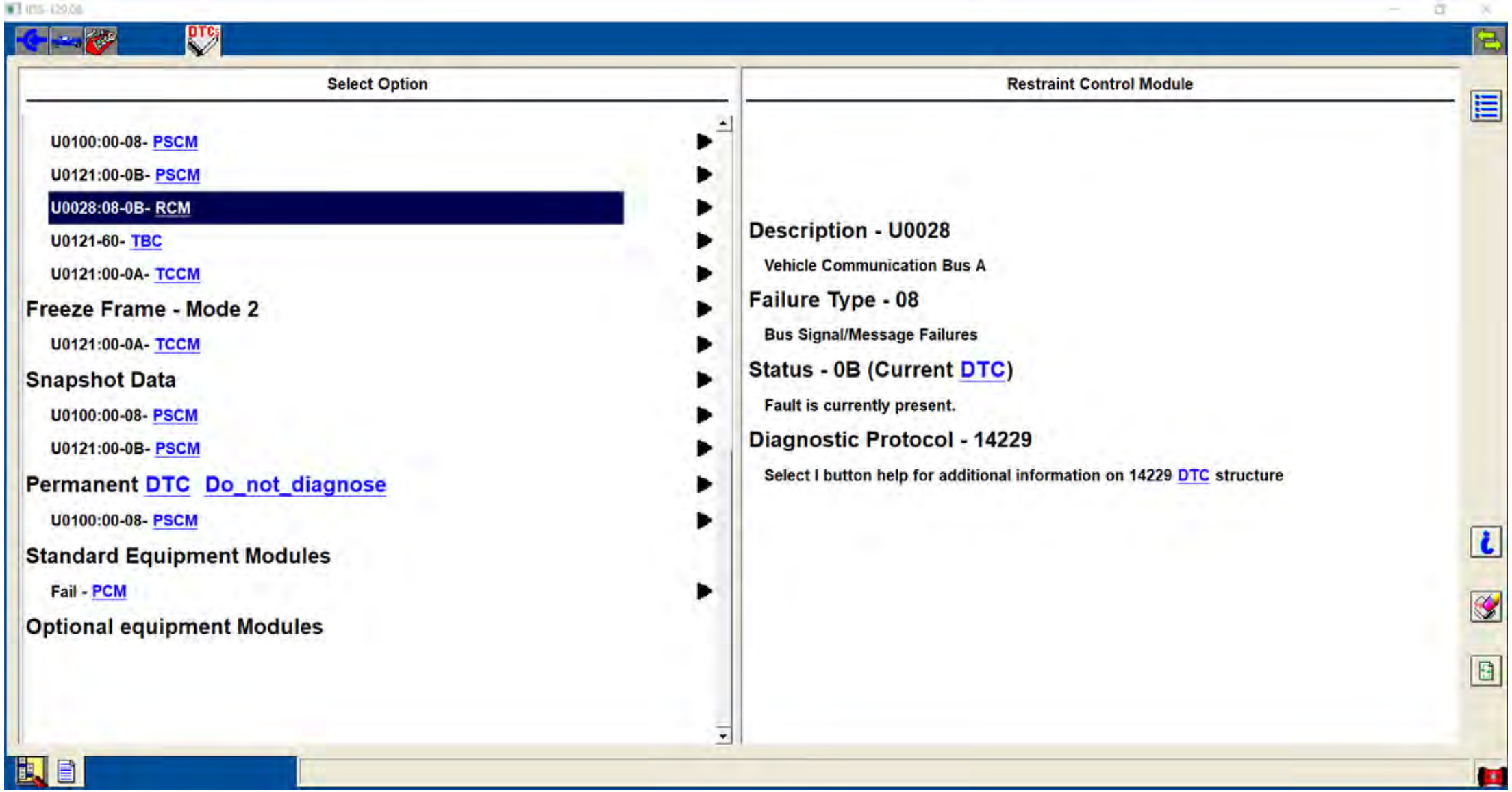
DTC
Select Option
U0100:00-08- PSCM
U0121:00-0B- PSCM
U0028:08-0B- RCM
U0121-60- TBC
U0121:00-0A- TCCM
Freeze Frame - Mode 2
U0121:00-0A- TCCM
Snapshot Data
U0100:00-08- PSCM
U0121:00-0B- PSCM
Permanent DTC Do_not_diagnose
U0100:00-08- PSCM
Standard Equipment Modules
Fail - PCM
Optional equipment Modules
Restraint Control Module
Description - U0028
Vehicle Communication Bus A
Failure Type - 08
Bus Signal/Message Failures
Status - 0B (Current DTC)
Fault is currently present.
Diagnostic Protocol - 14229
Select I button help for additional information on 14229 DTC structure

Network Monitor Report

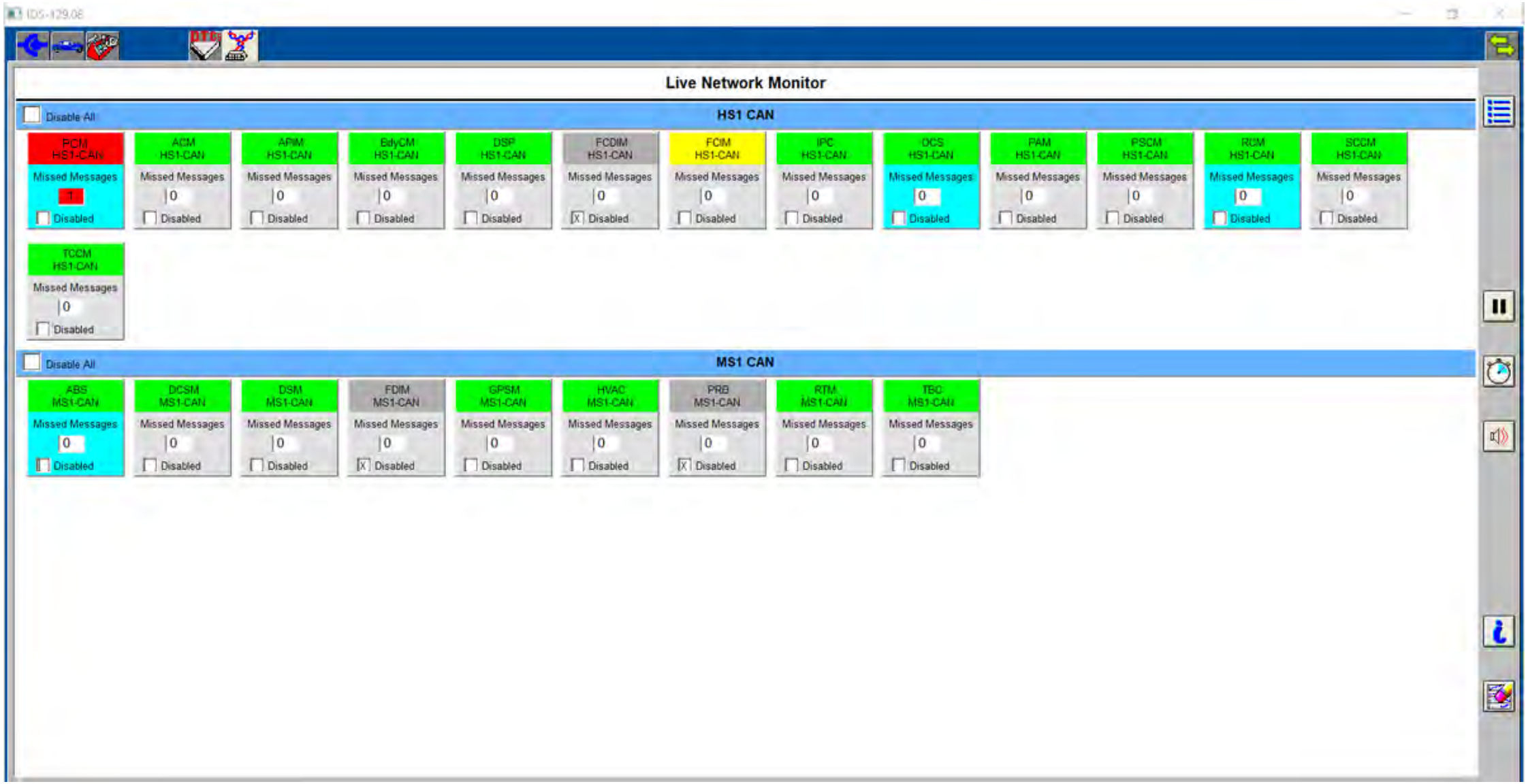

PCM No Communication – Where Do You Start?

Module Communication "Basics"

- **Power Supply** to B+
- **Power Supply** to Ignition Sources
- **Wake-Up Signals** (If Applicable)
- **Ground Supply** to Module
- **Communication Signal Integrity** to Module from Communication Network
- **POWERS, GROUNDS & COMMS!**

Where are these circuits?

- **Power Supply** to B+
- **Power Supply** to Ignition Sources
- **Wake-Up Signals** (If Applicable)
- **Ground Supply** to Module

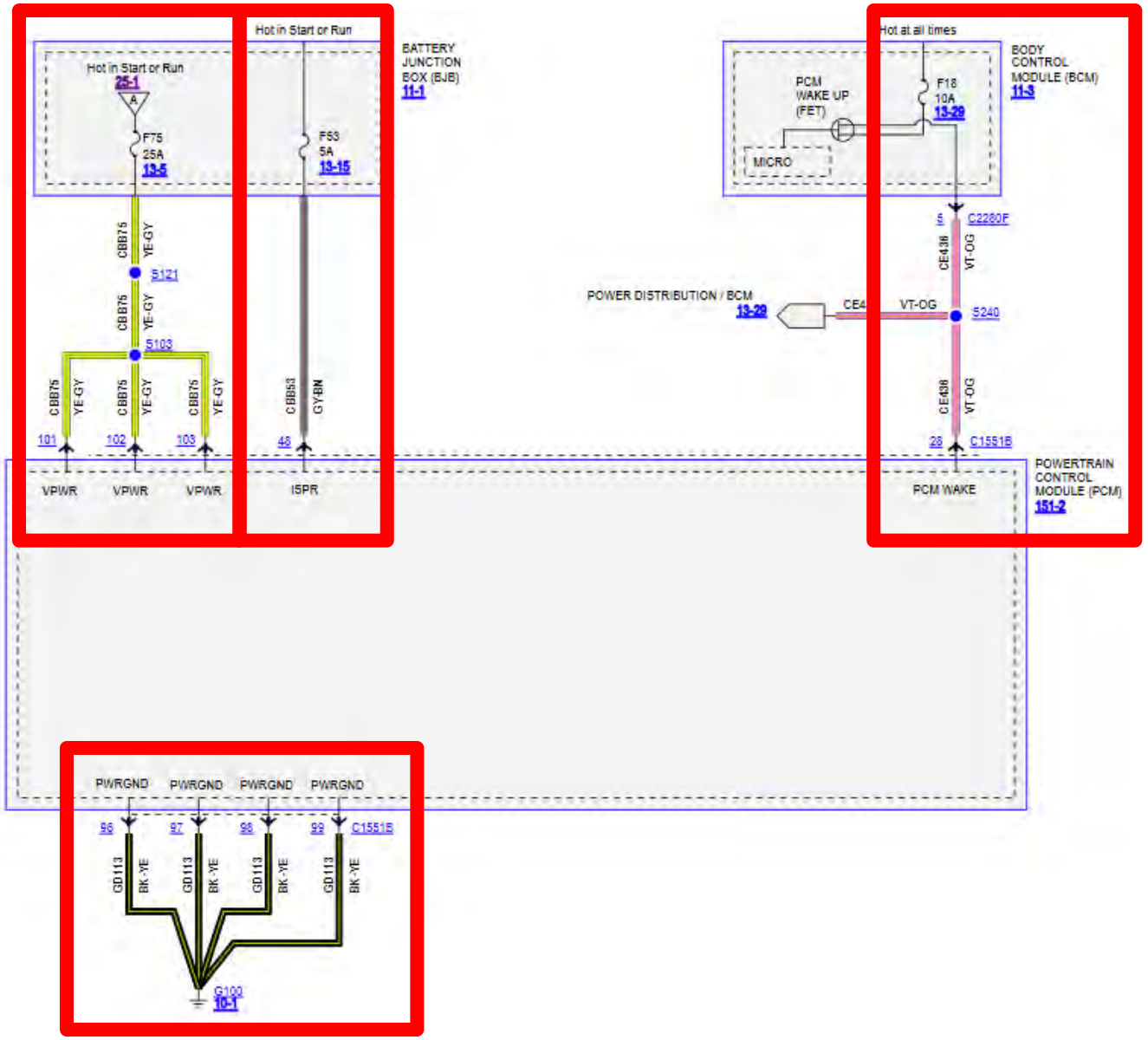

Communication Integrity

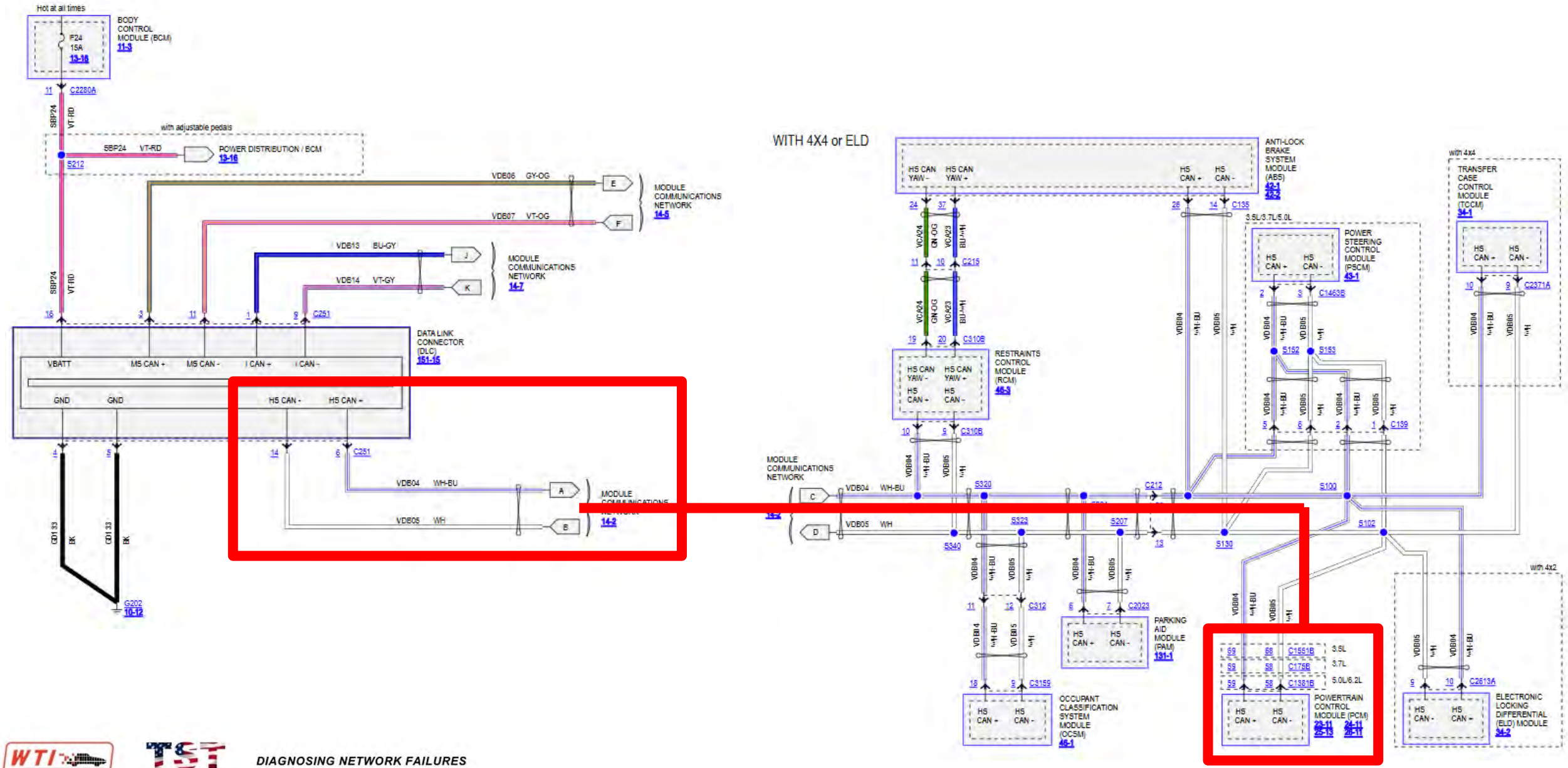

Build a Test Plan Based on Data!

Where do we start?

- Does communication integrity make sense, when applied to the symptoms present?
- Voltage drop **Powers**, **Grounds** & **Wake-Up** signal at the PCM to test the PCM (**Under the failure condition**)

Check all Circuits Under the Failure Mode

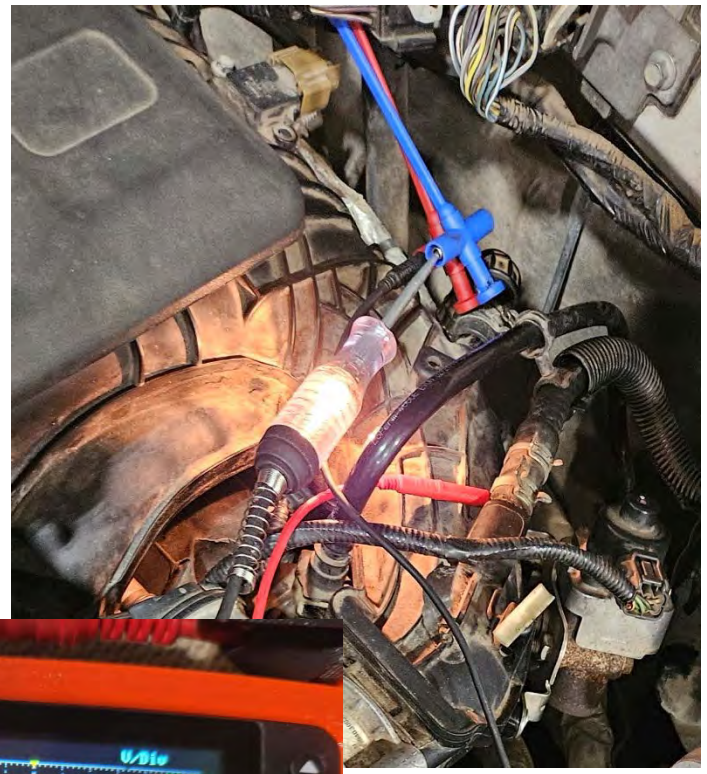

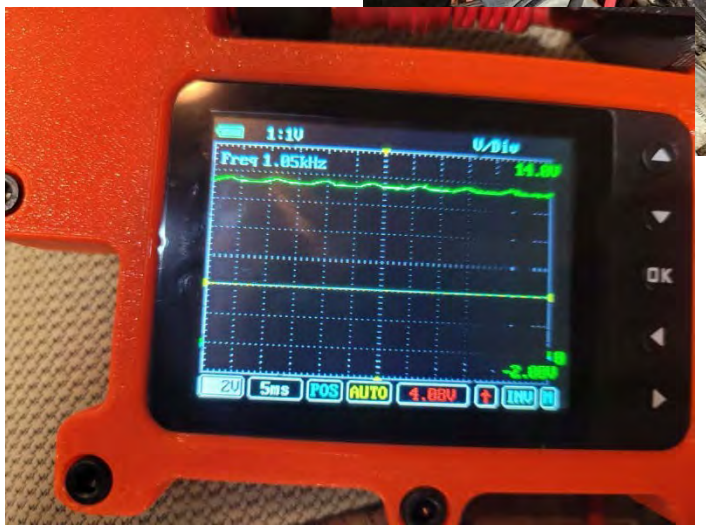

- Voltage dropped while plugged in and under the failure mode. Test were within “**specification**”

- All 3 B+ circuits test “within spec”
- ISPR test “within spec”
- Wake-Up circuit test “within spec”
- All 3 Grounds test “within spec”

LESS THAN .3 Vdc DROP LOADED!!!

WE USED A SCOPE & TESTLIGHT

Communication Circuit? (PCM Plugged In)

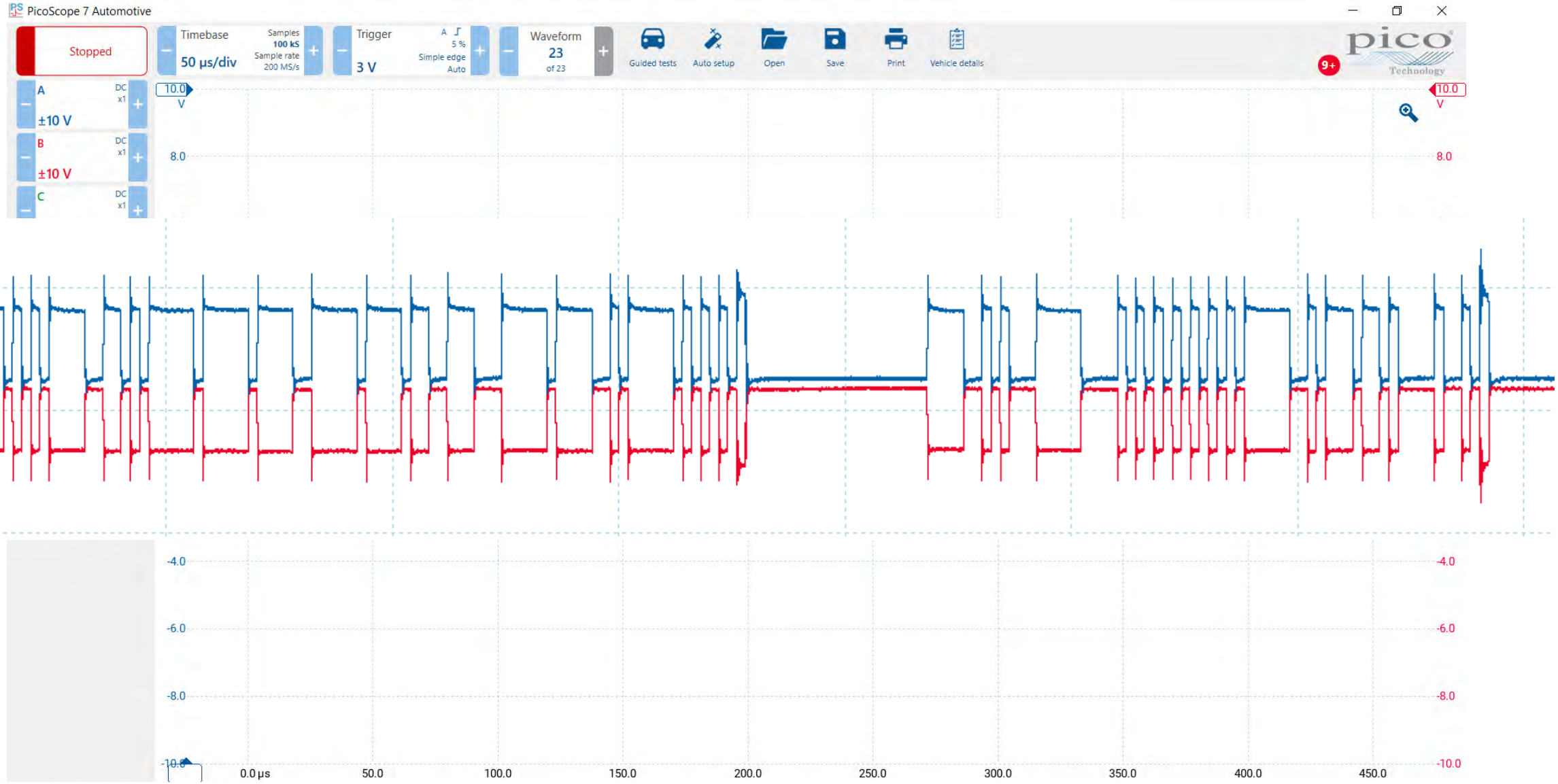

Dead to Rights! Powers, Grounds & Comms!

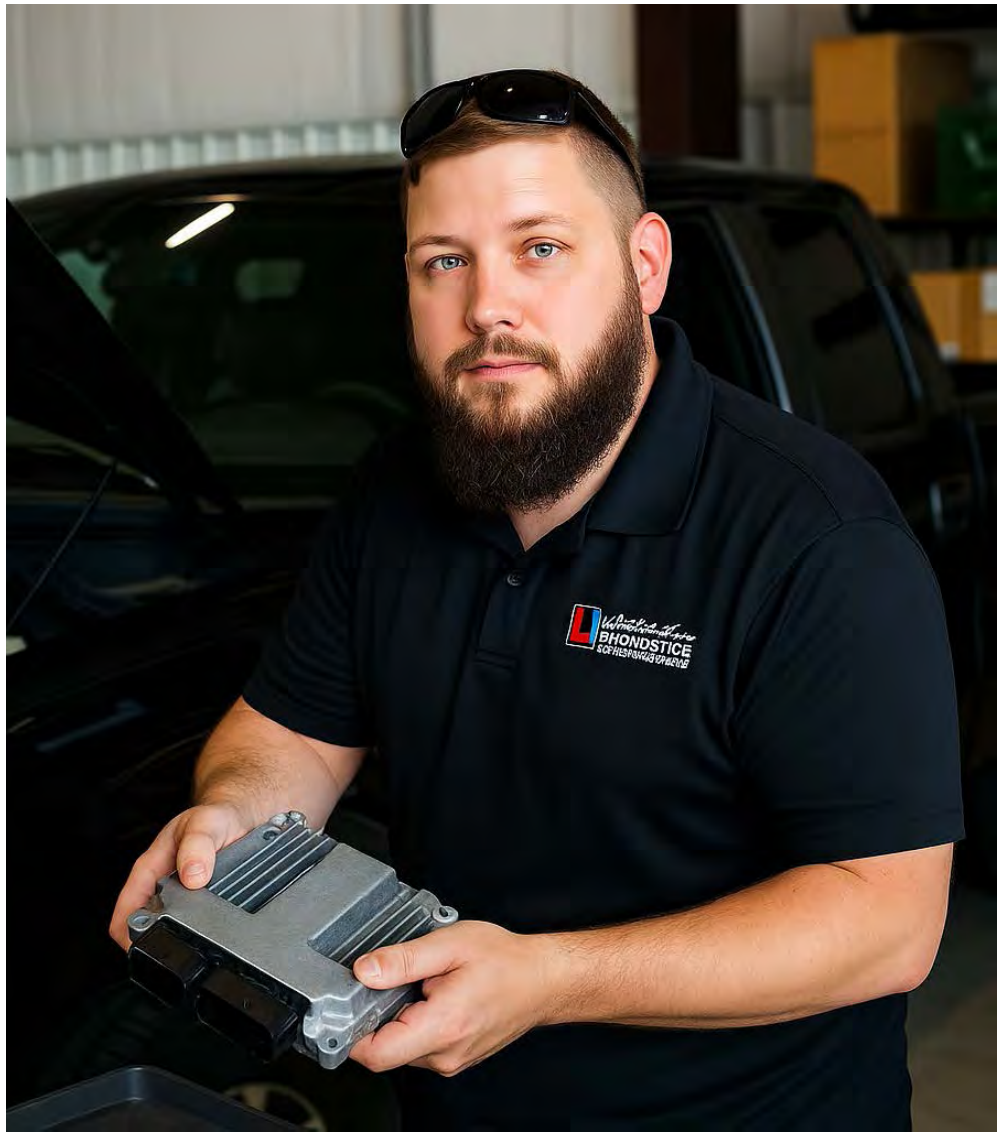

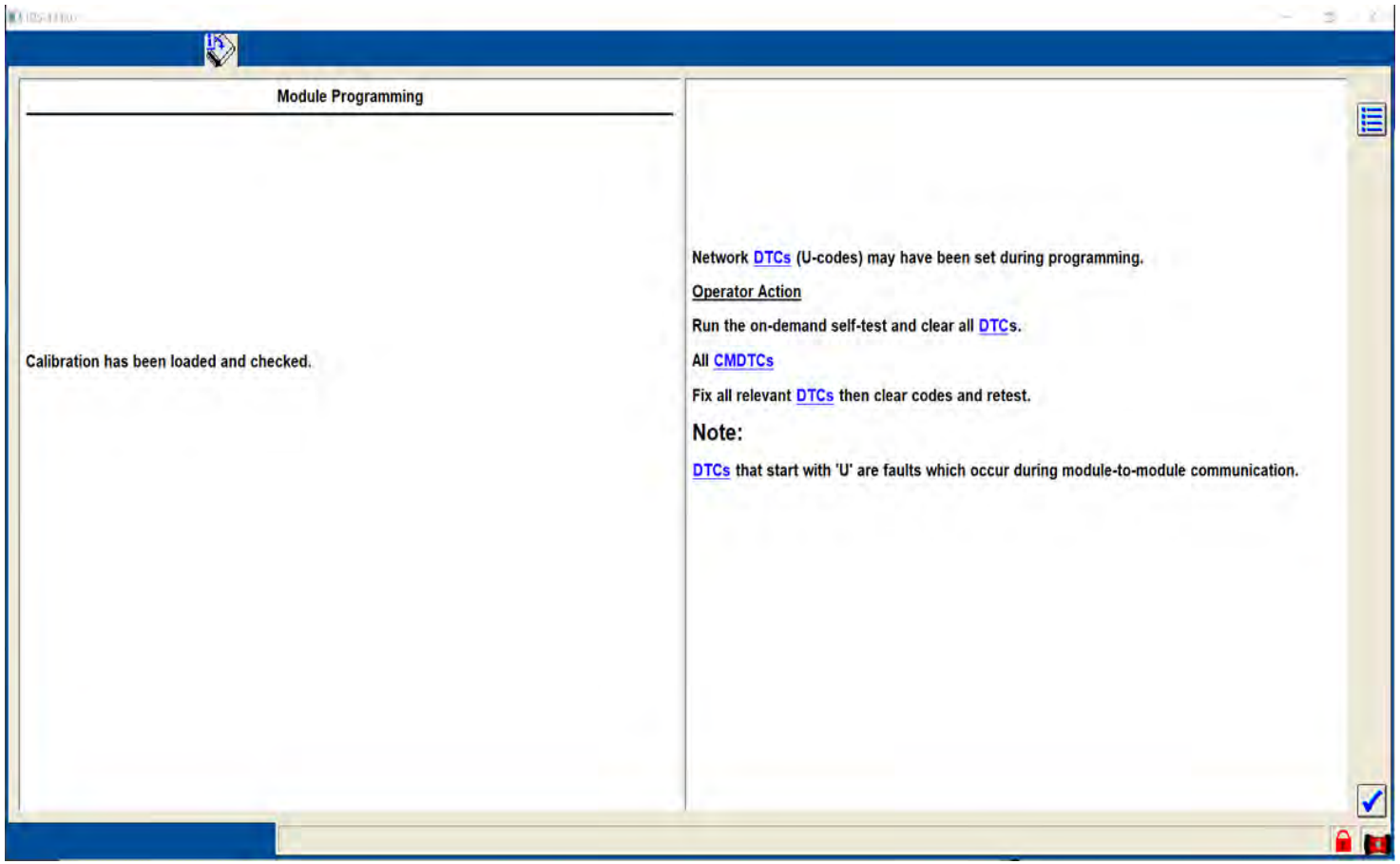

Same Issue!

Where did we/they go wrong?

- A PCM had already been tried before I performed any testing on the vehicle.
- I may have called for a PCM as well.
- A valuable lesson was about to be learned!
- Think about the “**Reset**” conditions…

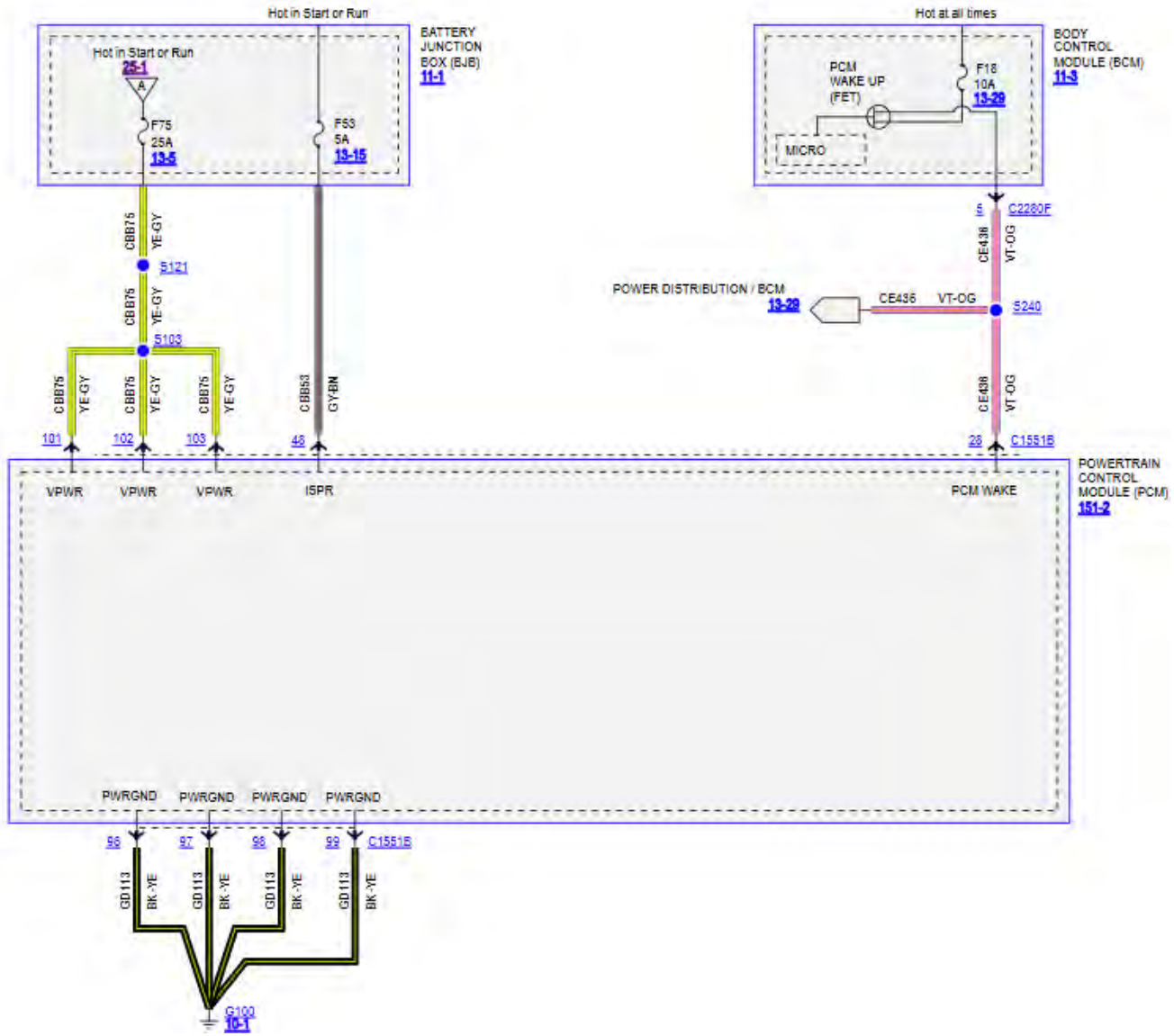

A Closer Look at Wake-Up & Ignition Circuits

- The wake up signal from the BCM is a simple FET (Field Effect Transistor) circuit that requires provides B+ on and Off ONLY in this circuit.

- Similar design in the “Hot in Start or Run” circuit for the ISPR (Ignition Switch Position Run) circuit.

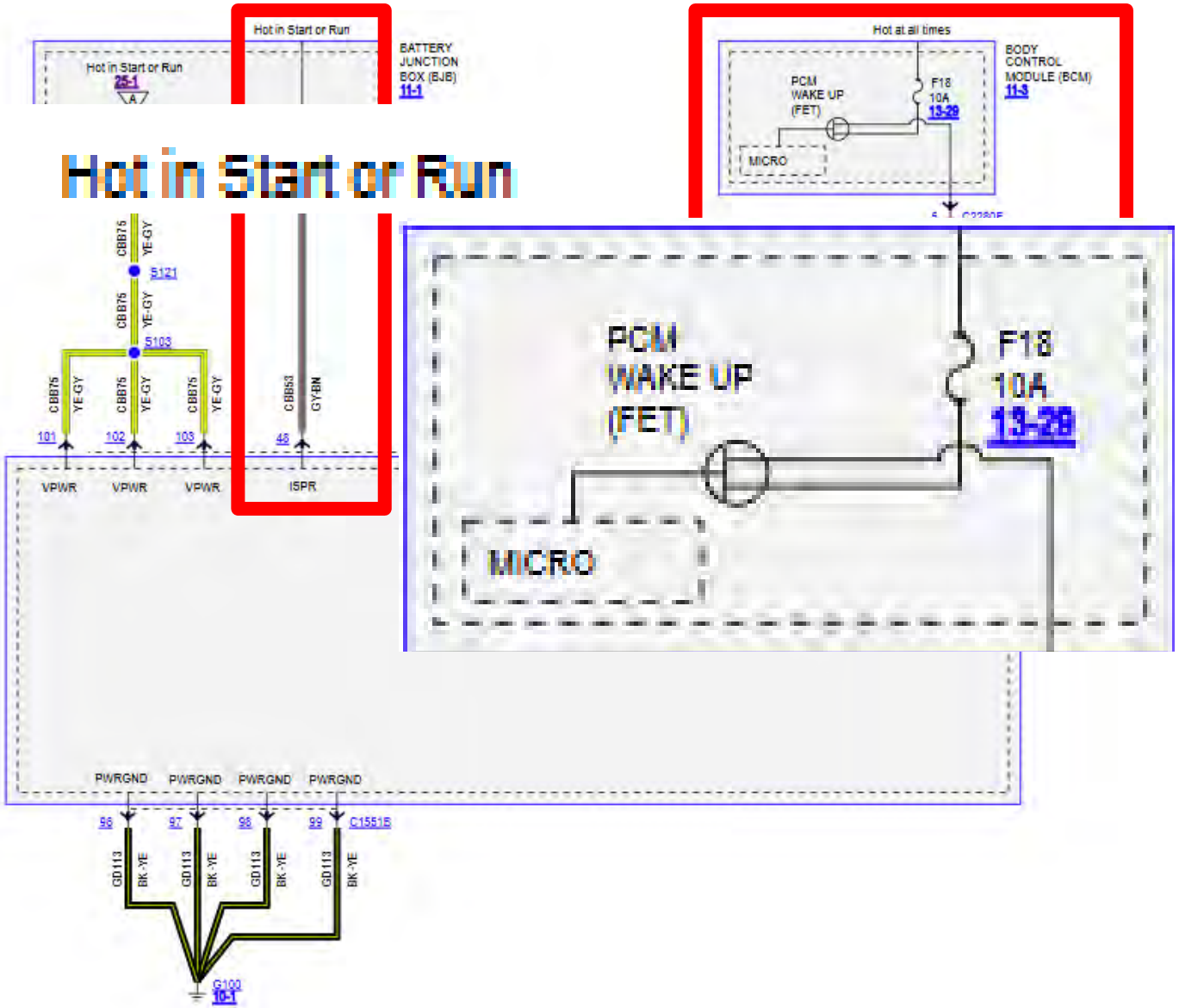

What is happening? Key On (ISPR)

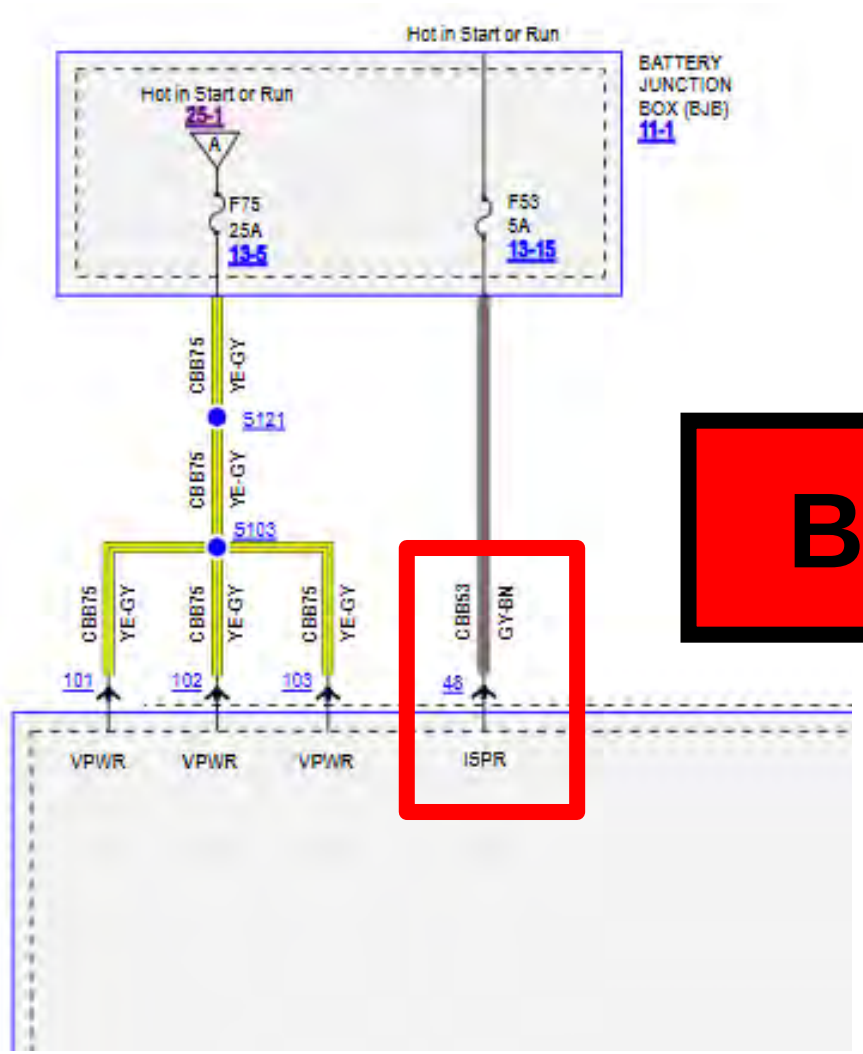

B+ Key On

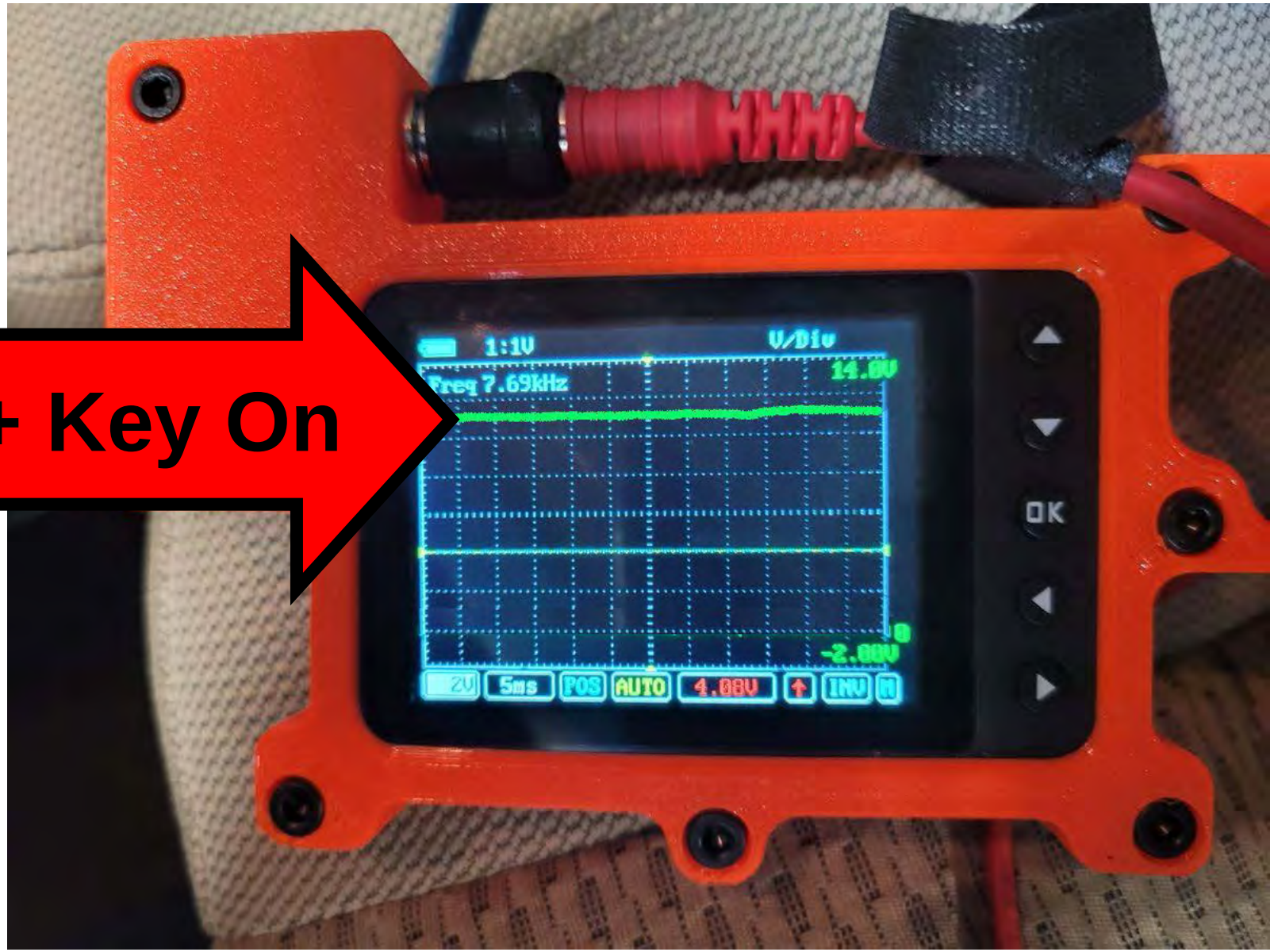

What is happening? Key OFF (ISPR) NOT BROKEN

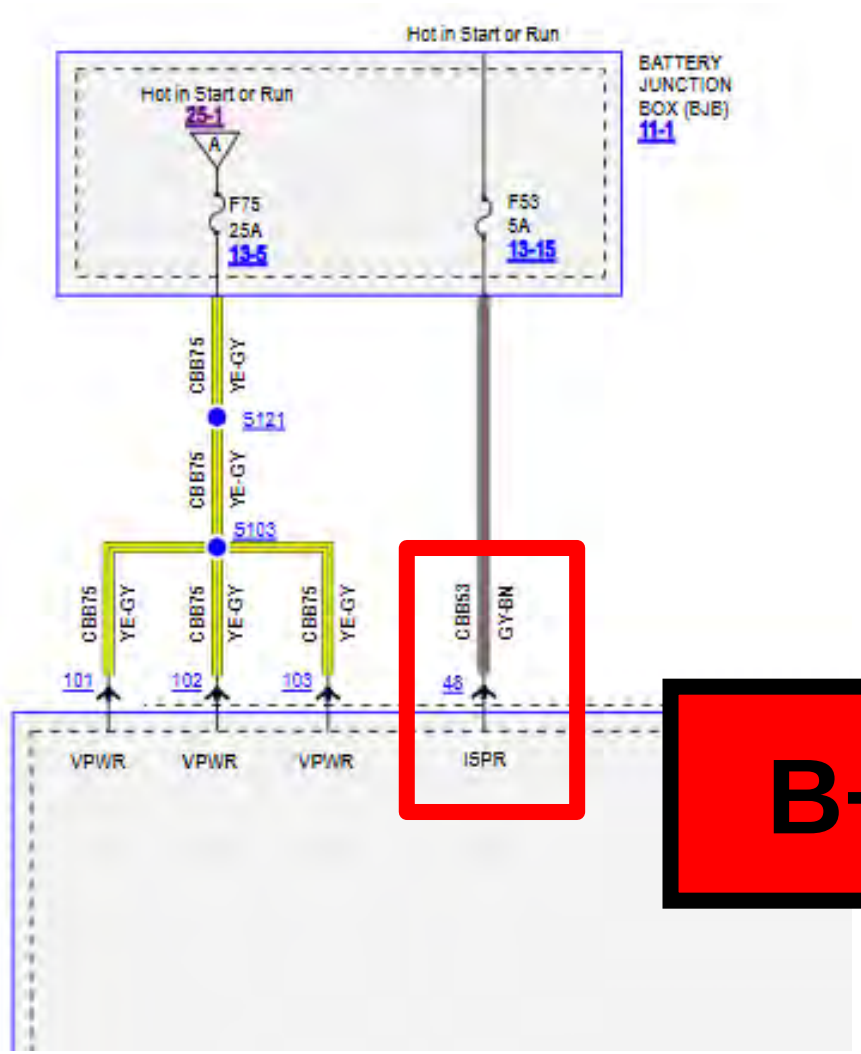

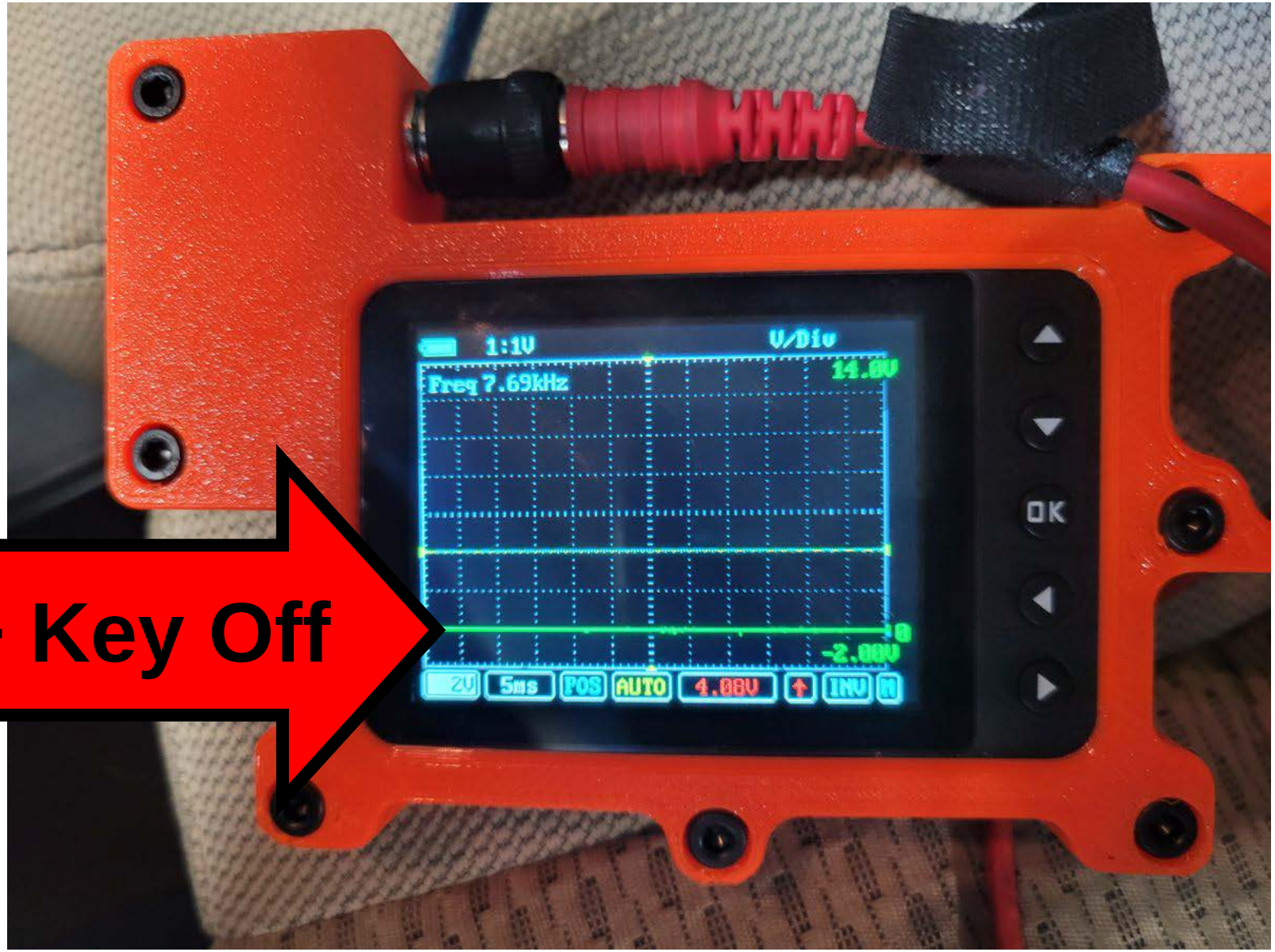

B+ Key Off

What is happening? Key Off (ISPR) BROKEN!!!

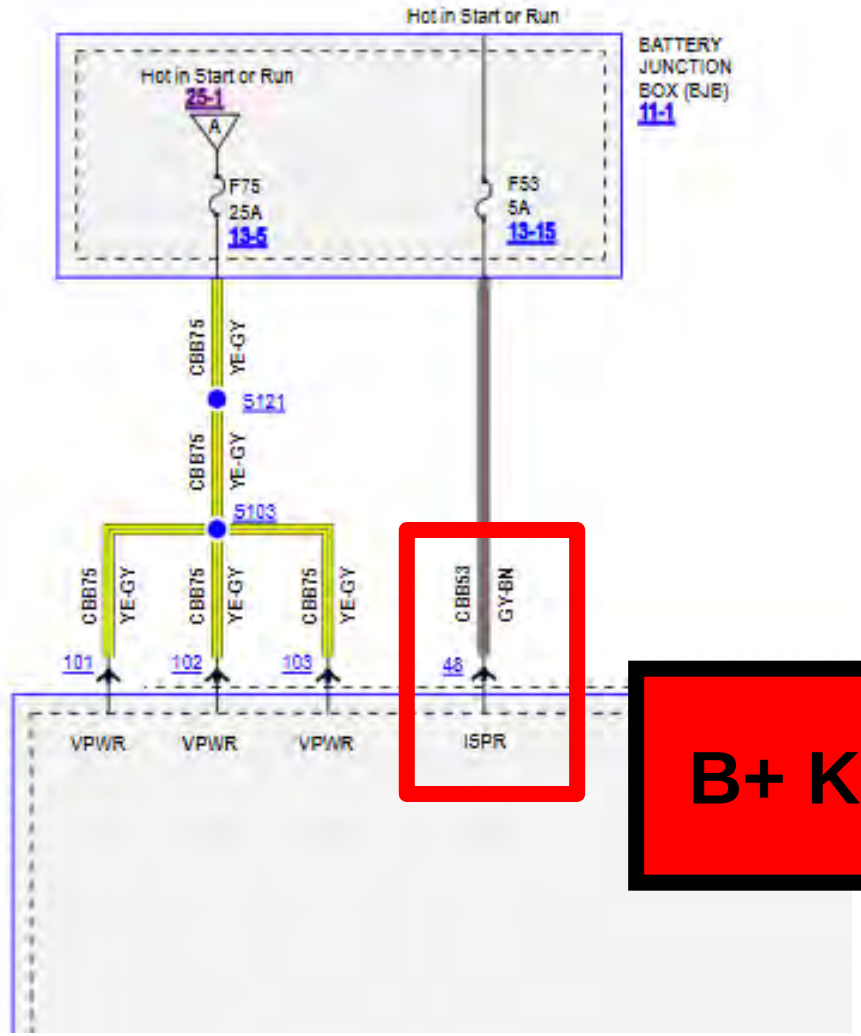

B+ Key Off BROKEN

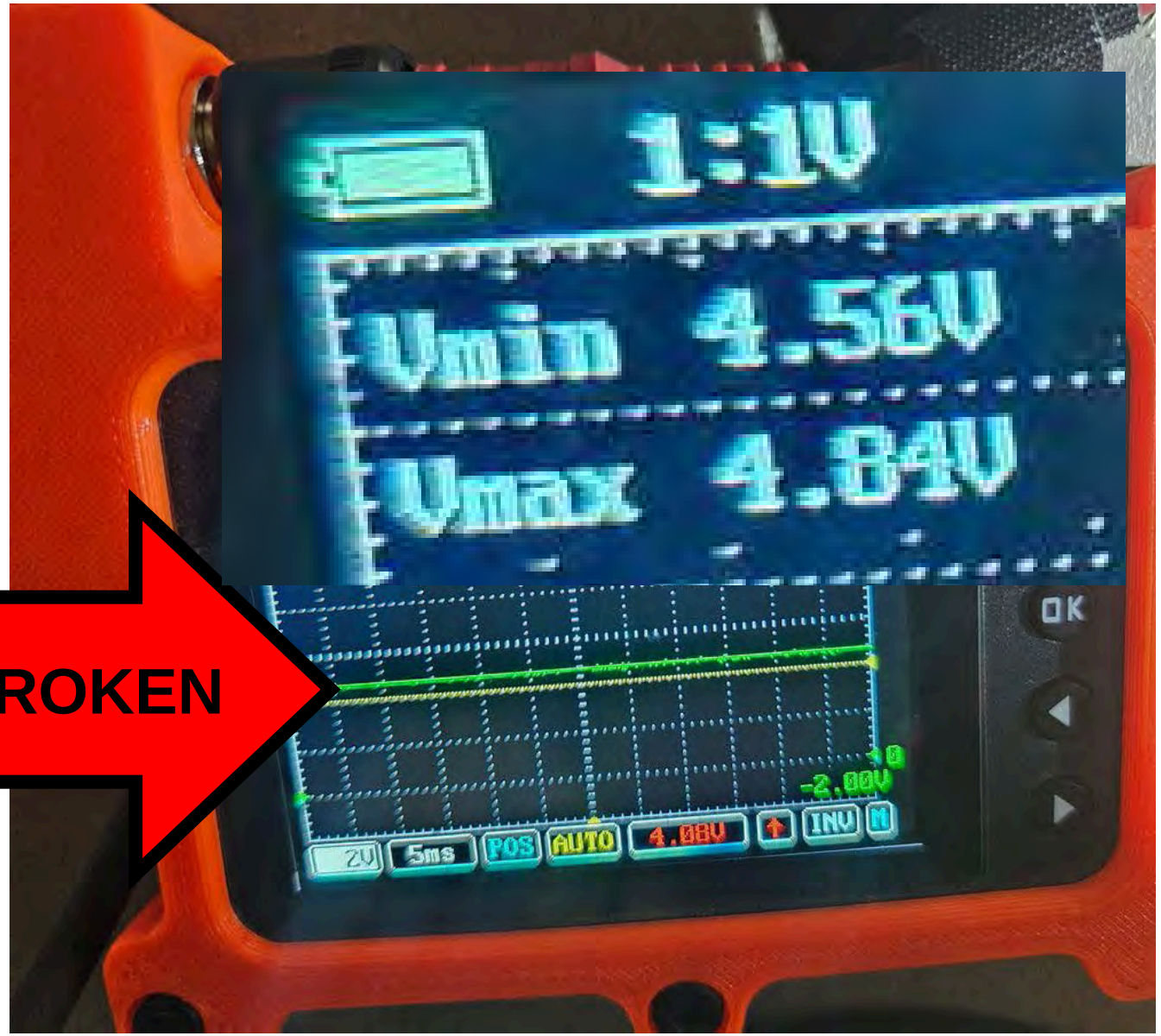

The research begins! Where can the ISPR be shorted!

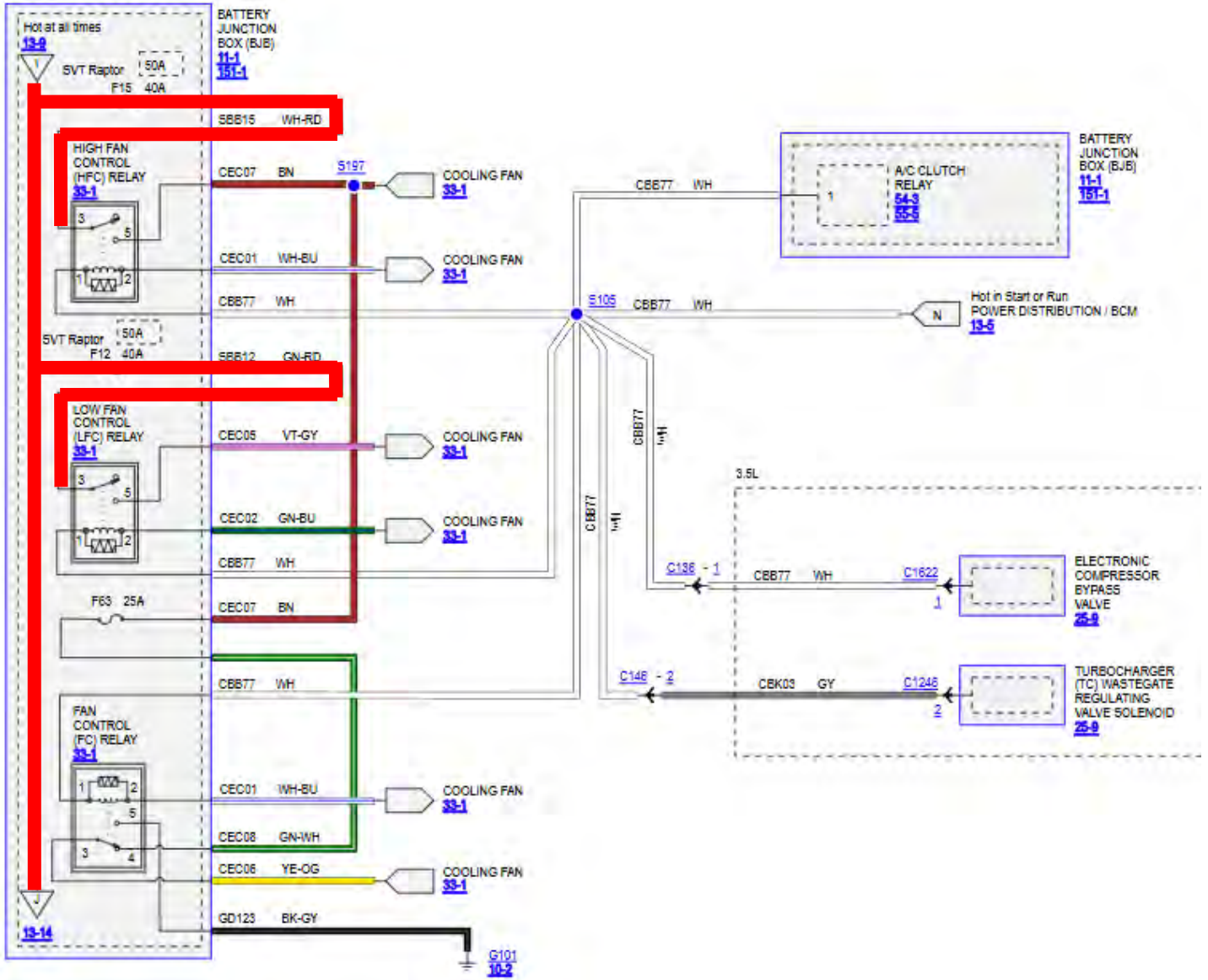

The research begins! Where can the ISPR be shorted!

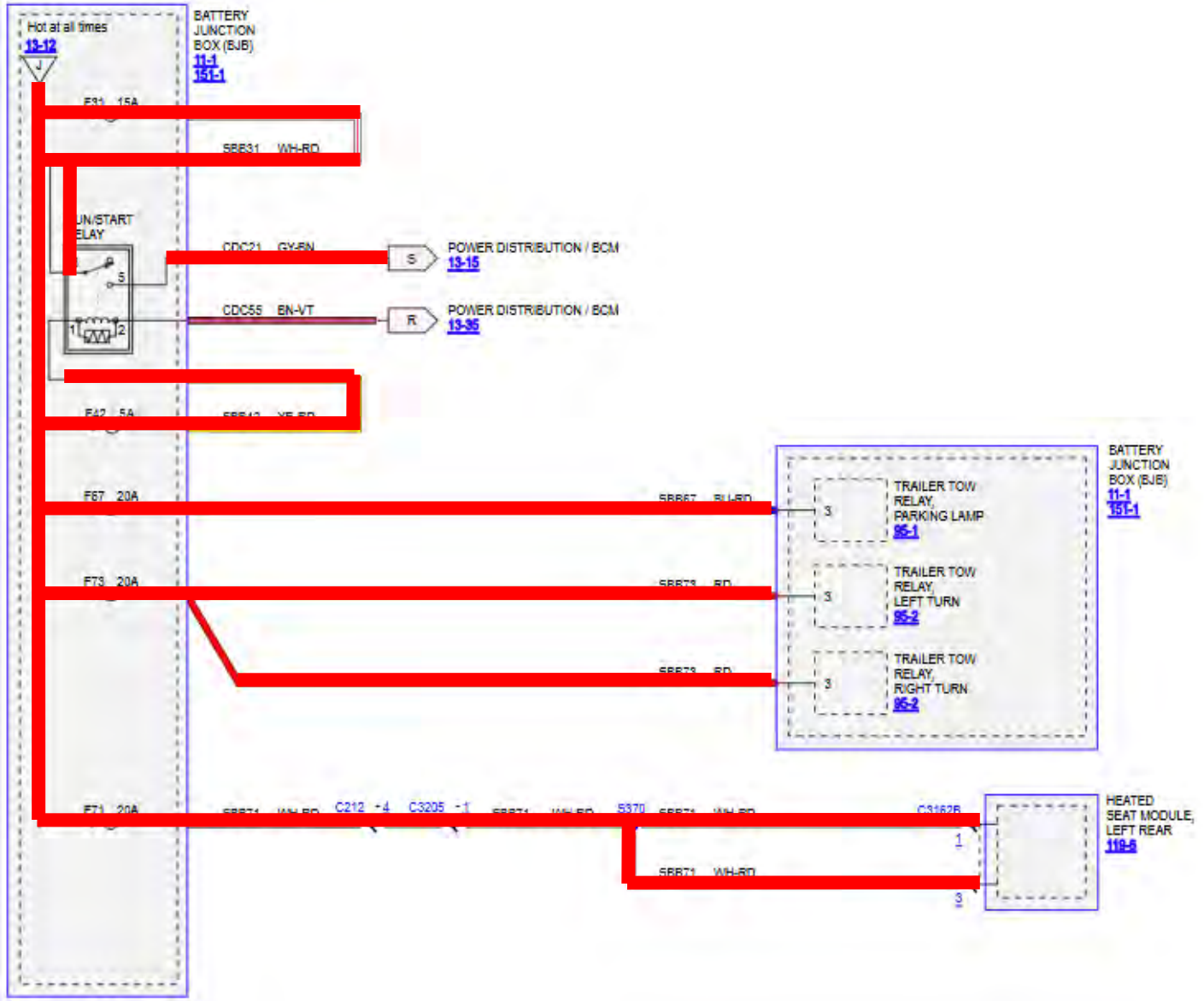

The research begins! Where can the ISPR be shorted!

The research begins! Where can the ISPR be shorted!

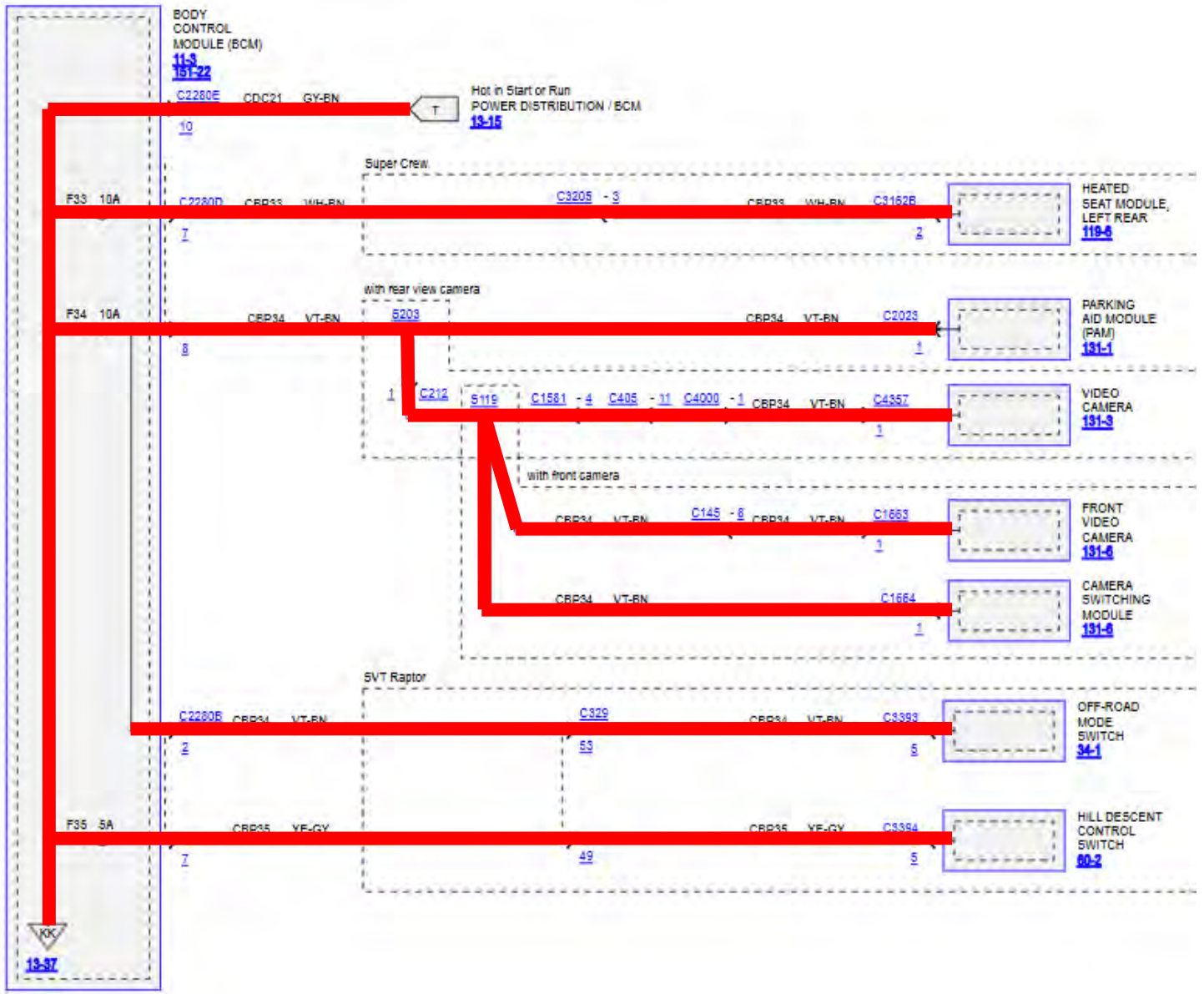

The research begins! Where can the ISPR be shorted!

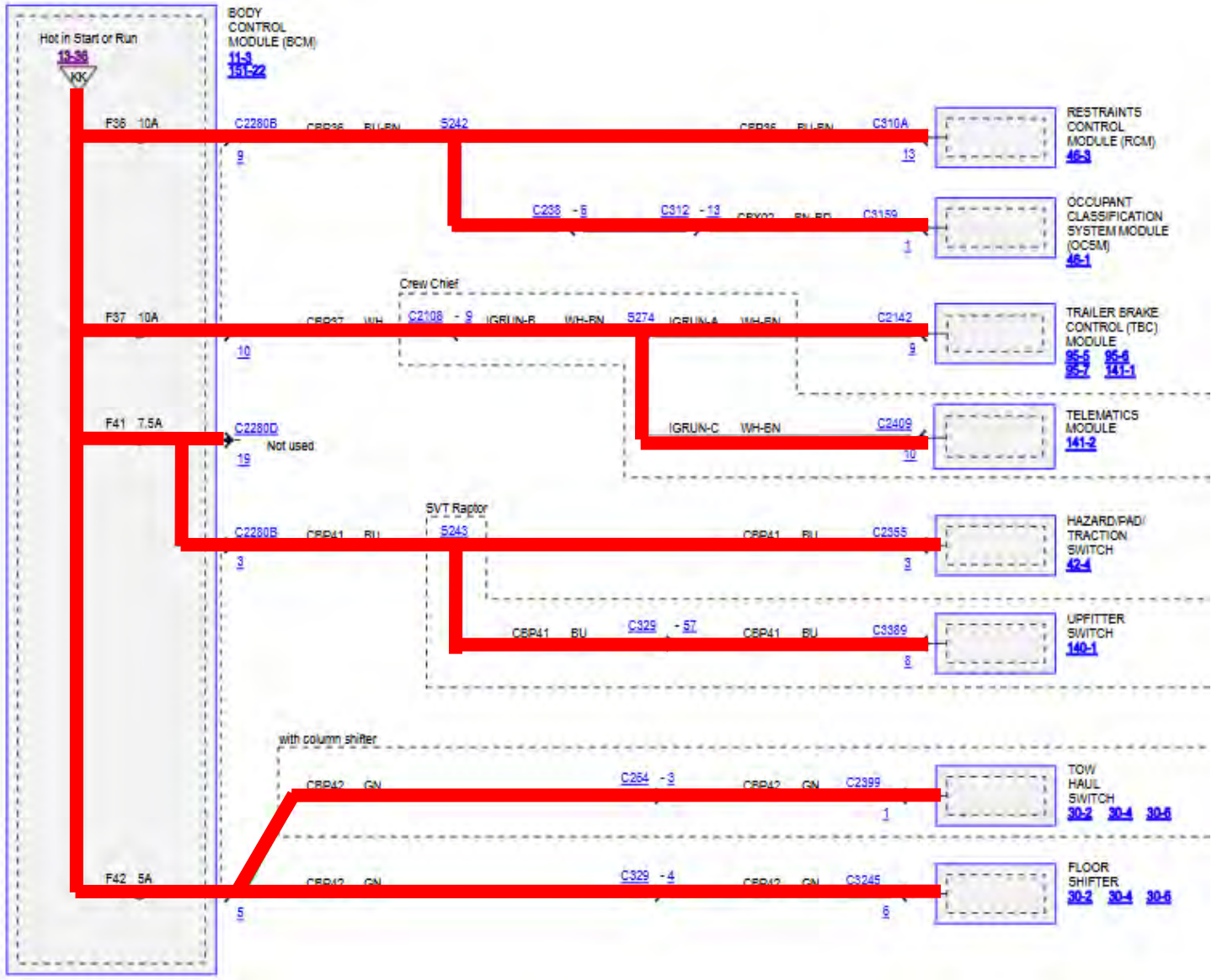

Why is it this way?

Let’s get this module open and look at the ISPR circuit!!!

The module is opened, and we research the component(s) that are powered by the ISPR circuit.

What's in the module?

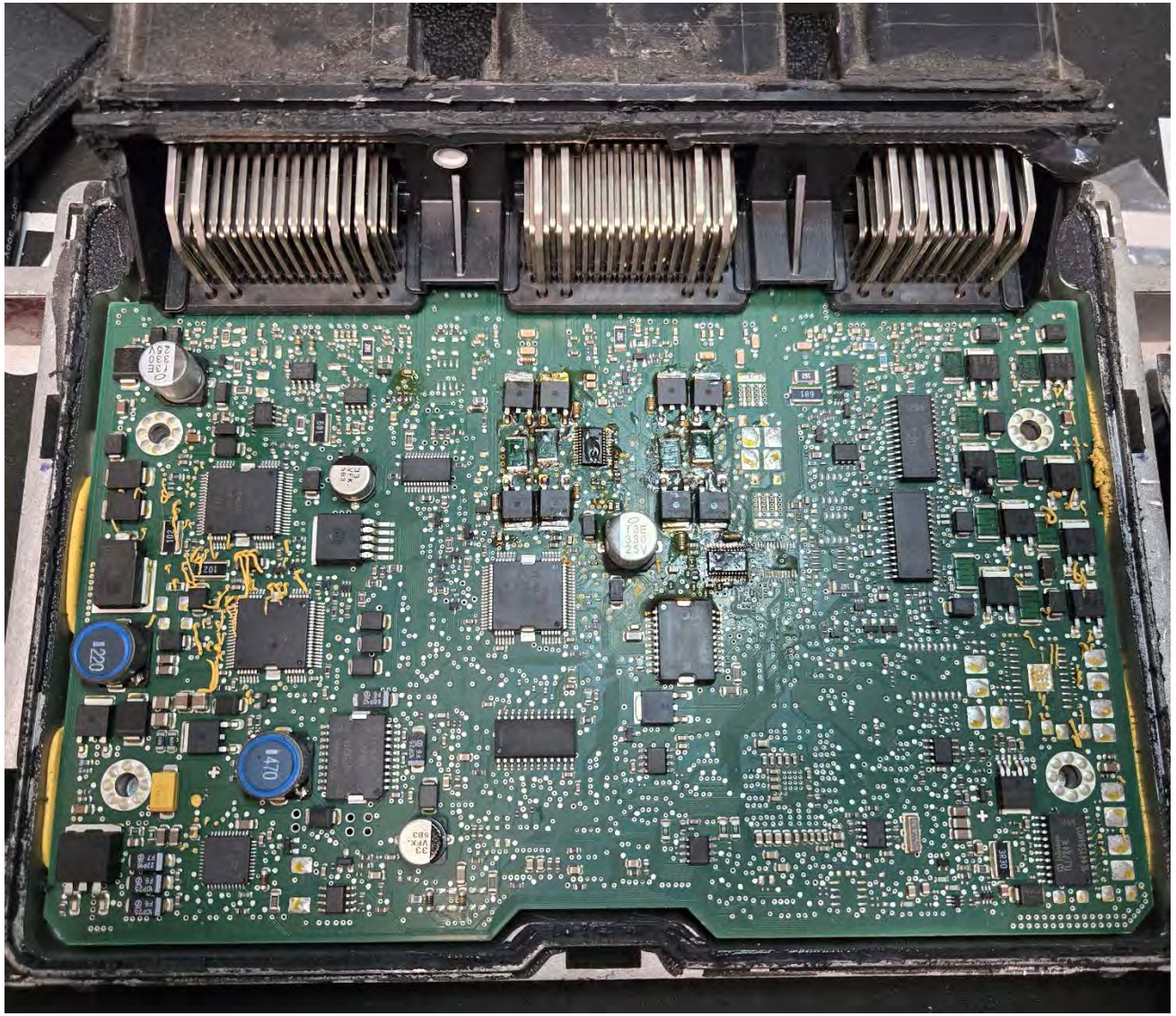

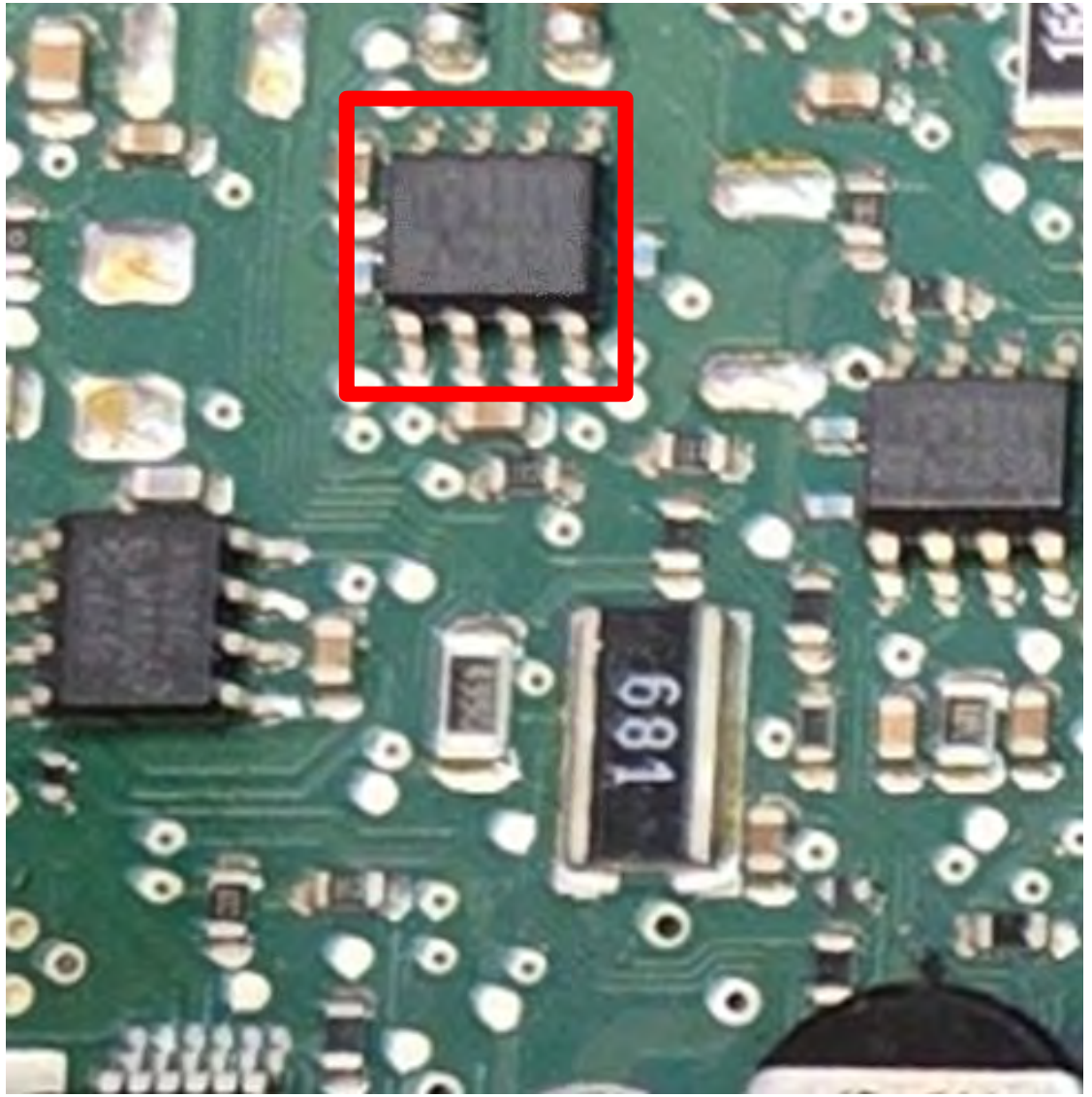

What do we do with this information?

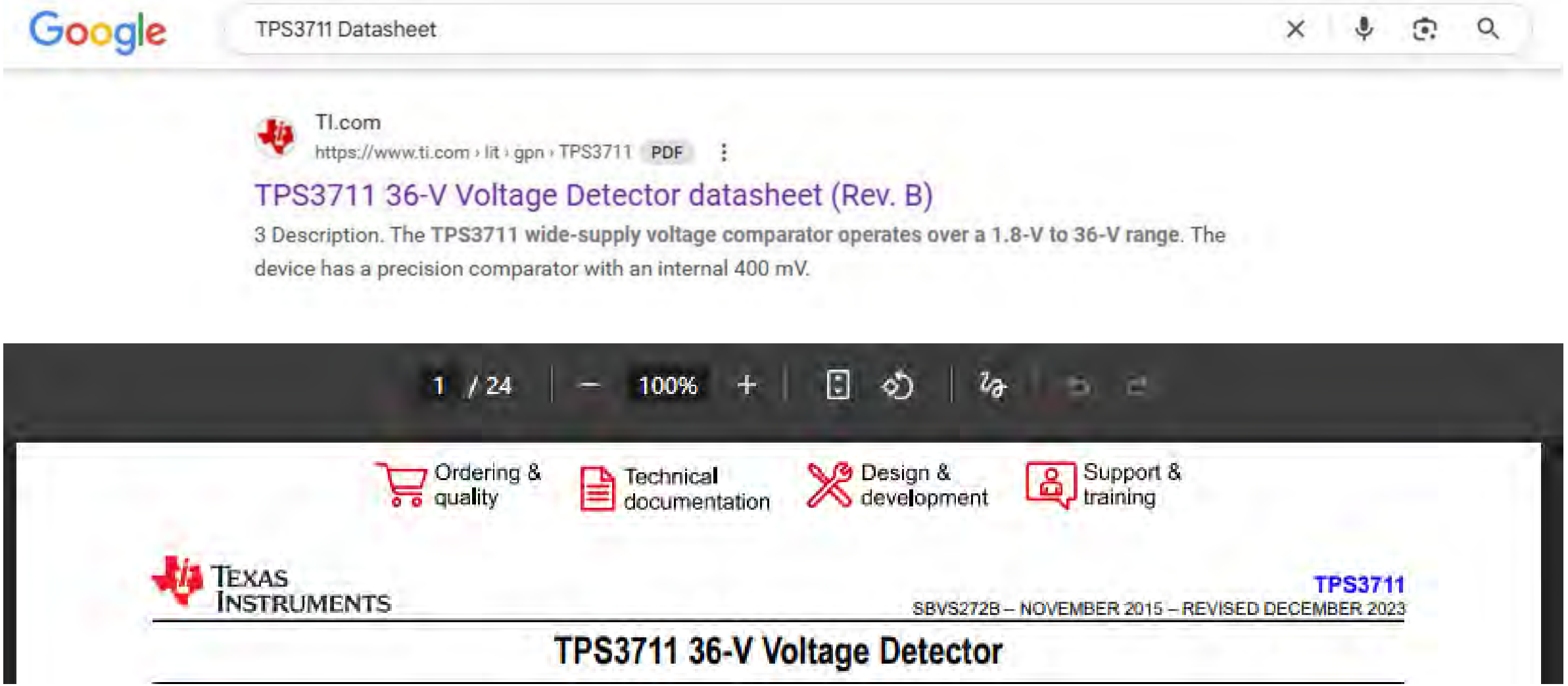

Conclusion!

- 99% of the time Powers, Grounds & Comms will diagnose a module communication issue.
- Going beyond regular wiring diagrams and service information tactics can pay off when it's the 1%
- Ask how & always ask why…..
- You don't know, what you don't know!

Single Wire Networks (SWCAN, LIN, Etc..)

- Multiple Network Designs
- Multiple Network Protocols
- Different Diagnostic Paths Depending on Network Design & Protocol
- Divide and Conquer is the Most Effective Under Most Failure Types

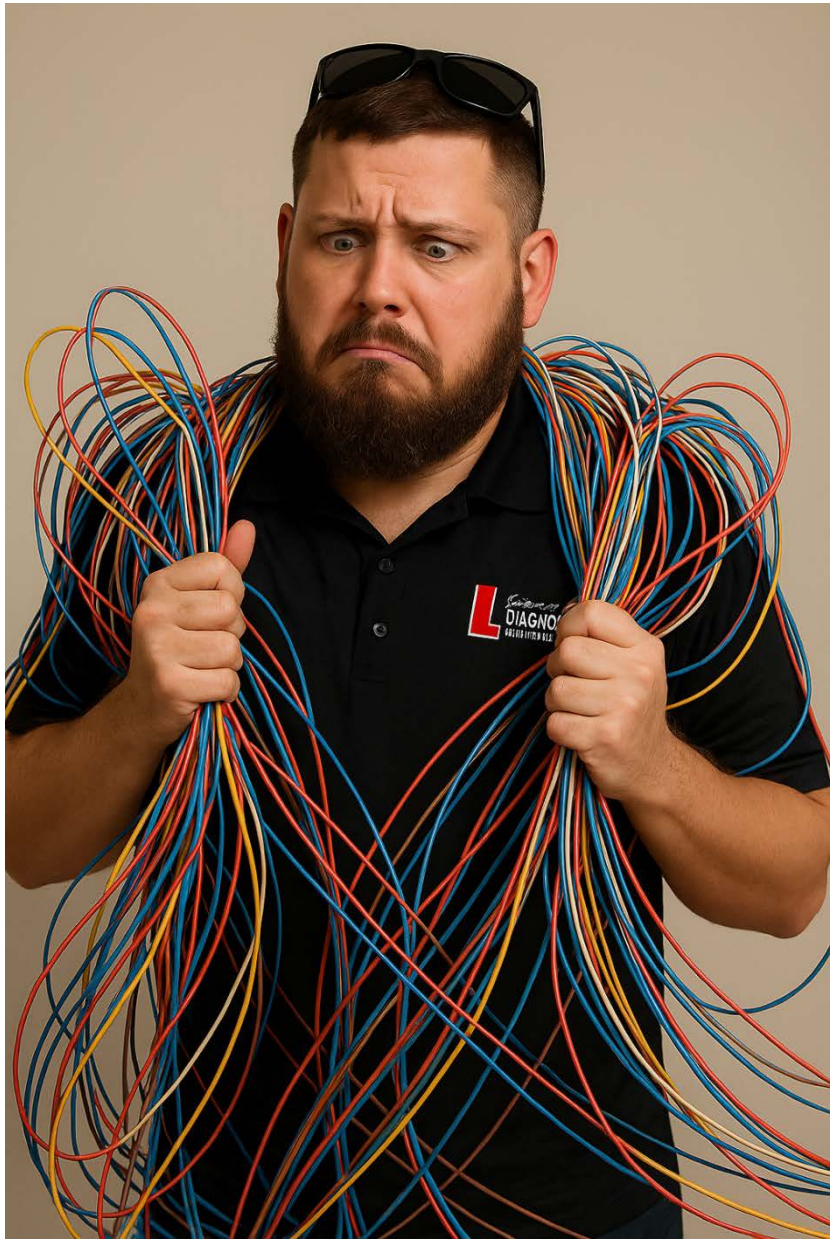

Class 2 / SWCAN/ K,L Line

Class 2 Serial Bus* / PCI Bus – GM, Ford, Stellantis
K, and L Line – Almost all manufacturers (Nissan and VW most notably to have issues)
SW CAN – DLC 1 GM (Similar to Class 2), Others

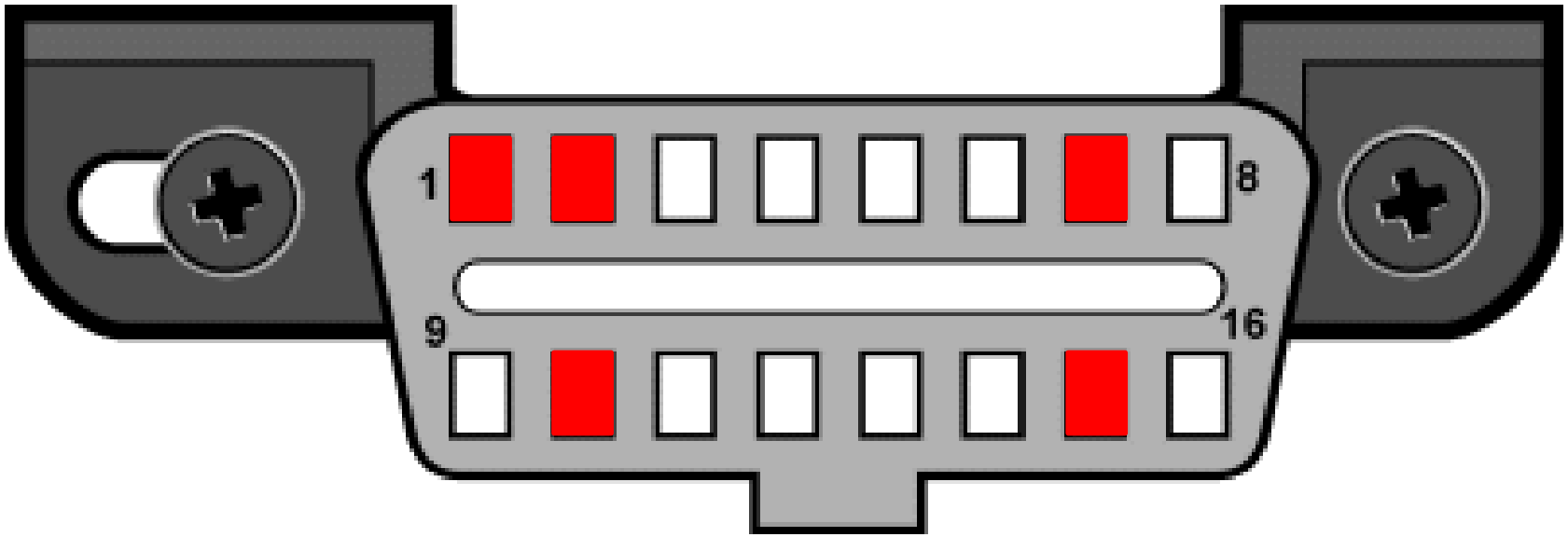

Class 2 Serial BUS / PCI BUS

Class 2 Serial Bus* / PCI Bus – GM, Ford, Stellantis

DLC Pin 2*

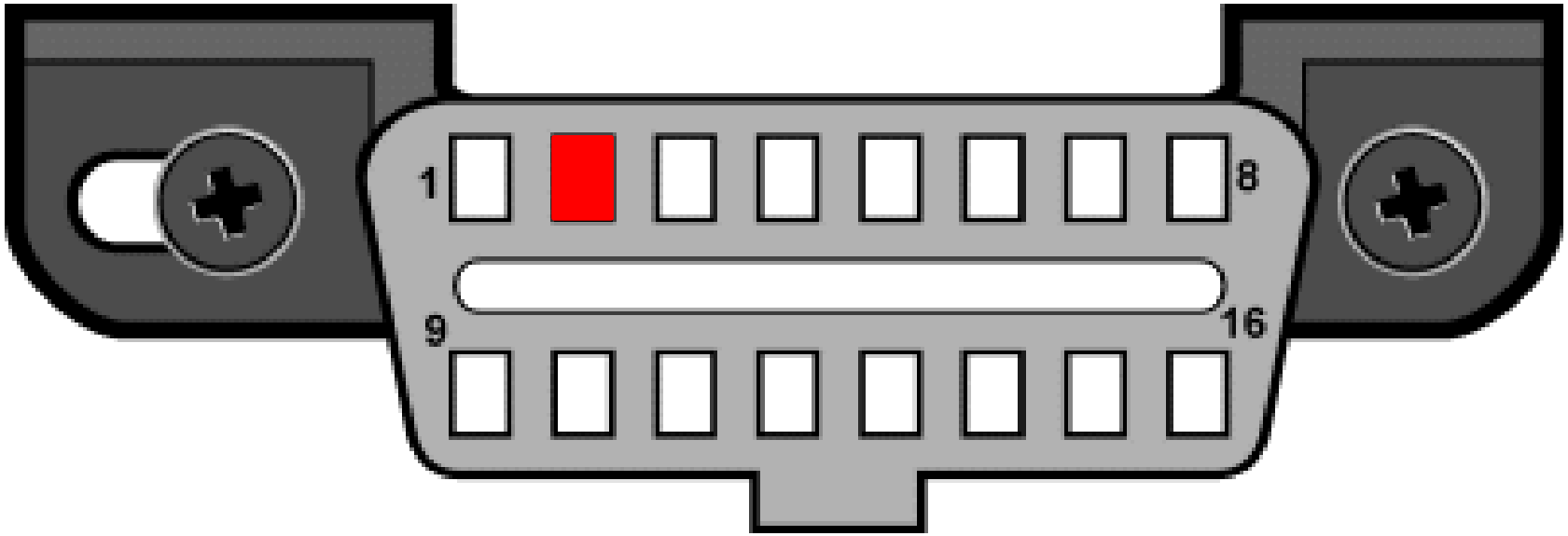

Class 2 Serial BUS / PCI BUS

Class 2 Serial Bus* / PCI Bus – GM, Stellantis

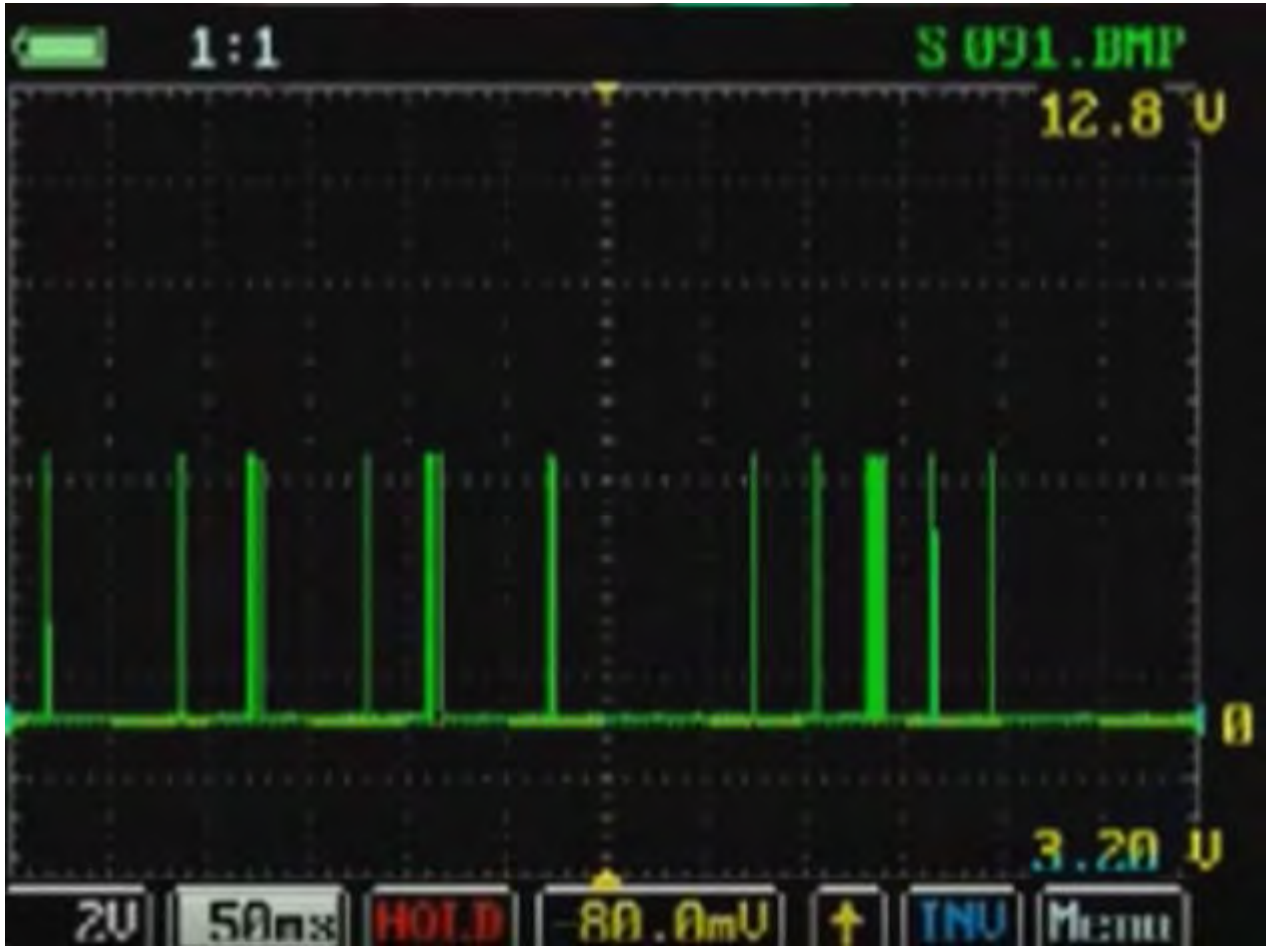

0 - 7 /7.5 Vdc Pull Up

Class 2 Serial BUS / PCI BUS

GM and Chrysler Specifically

0 - 7 Vdc Square Wave “Pull Up” Design on GM – “Class 2”

0 - 7.5 Vdc Square Wave “Pull Up” Design on Chrysler – “PCI BUS”

Essentially the voltage on the BUS is at Zero when at rest, and is pulled up to either 7, or 7.5 volts to create transmission of data packets.

J1850 Network Data Packets

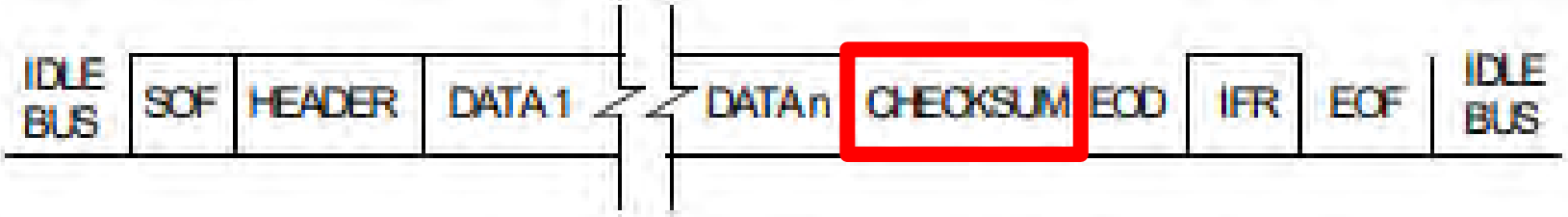

Figure 1. Single Byte Header Frame Format

Figure 2. Consolidated One-Byte Header Frame Format

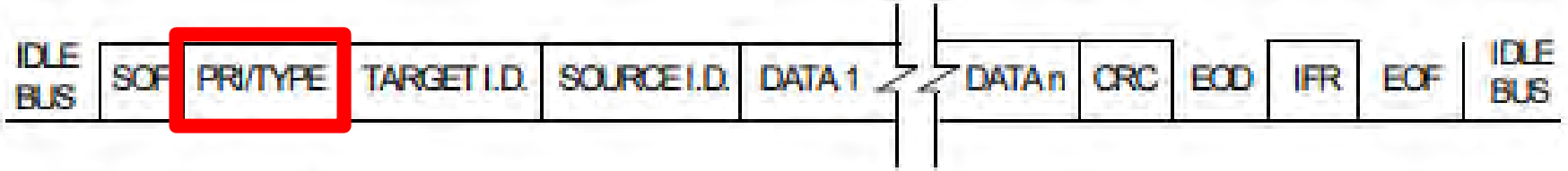

Figure 3. Consolidated Three-Byte Header Frame Format

J1850 Data Differences Breakdown

- **CRC (Cyclic Redundancy Check)** – Similar to Checksum

  If the calculated CRC on the receiving side doesn't match the transmitted CRC, the entire message is considered invalid and will be discarded or ignored by the receiving MODULE.

- **PRI (Priority)** – Handled in the standard dominant/recessive type of arbitration bit method we discussed in CAN!

  The exact PRI type values (bits) tell receiving ECUs how to treat the message whether to respond, who it's addressed to, and how urgently to process it.

f_{osc}	COMSEL	Communication Baud Rates	Communication Format
8 MHz	V_{DD}	41.7 kbps	PWM
8 MHz	V_{SS}	20.8 kbps	VPW
4 MHz	V_{DD}	20.8 kbps	PWM
4 MHz	V_{SS}	10.4 kbps	VPW

All SAE J1850 Networks

Feature	1 & 3 Byte Headers	1 & 3 Byte Headers	1 Byte Only Header
Bit encoding	PWM	VPW	VPW
Bus medium	Dual wire	Single wire	Single wire
Data rate	41.7 kbps	10.4 kbps	10.4 kbps
Data integrity	CRC	CRC	Checksum

J1850 PWM – Dual Wire (PINS 2 & 10)

J1850 VPW – Single Wire (PIN 2 ONLY)

SW-CAN

GM Single Wire CAN

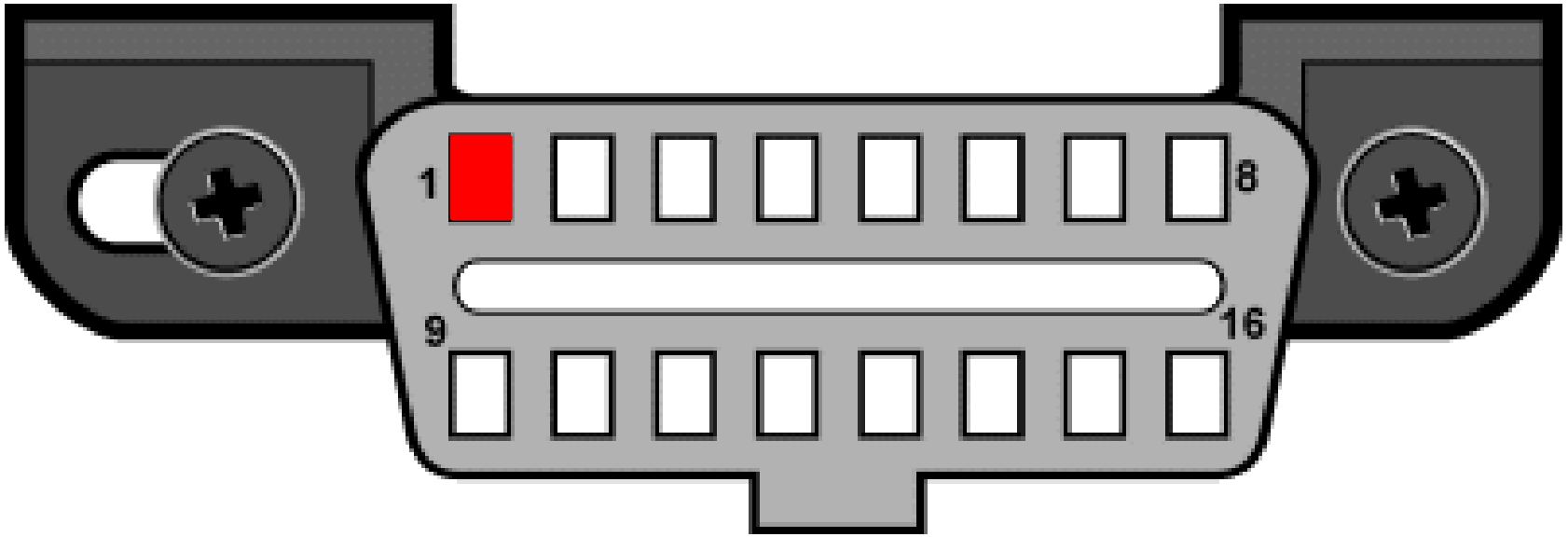

SW-CAN

Specifically, GM SW-CAN

Except for being a 5v square-wave, it is the same in architecture, and design as class 2 serial. In turn diagnosis, testing, and analysis is identical to our Class 2 serial data because of this.

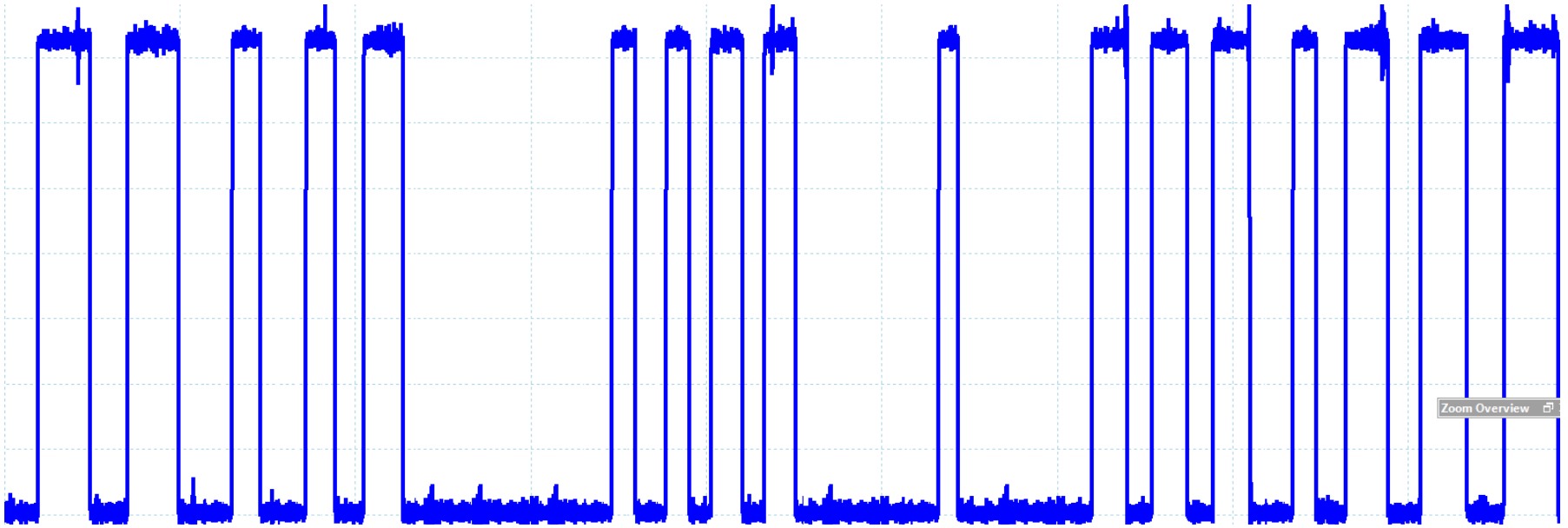

K - Line and L - Line

ISO9141-2

K - Line PIN 7

L - Line PIN 15

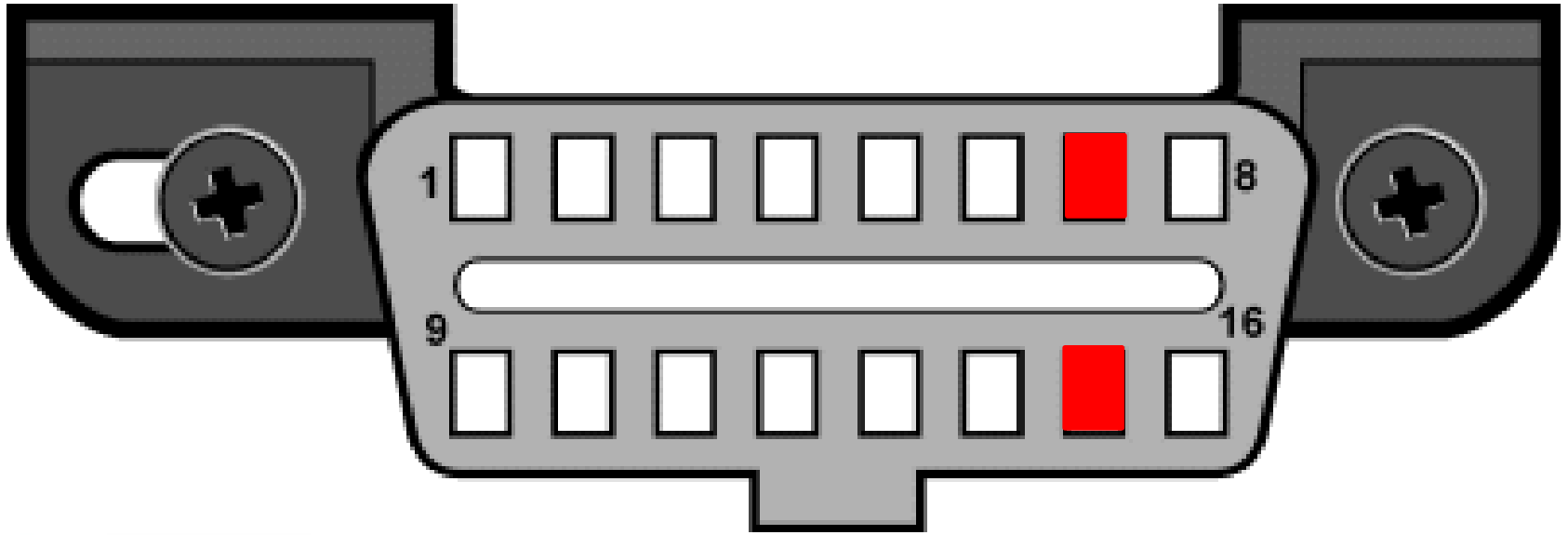

K - Line and L - Line

ISO9141-2

PIN 7 = K - Line / Most makes and models, Mostly Euro and Asian manufacturers.

PIN 15 = L - Line / Mostly Toyota

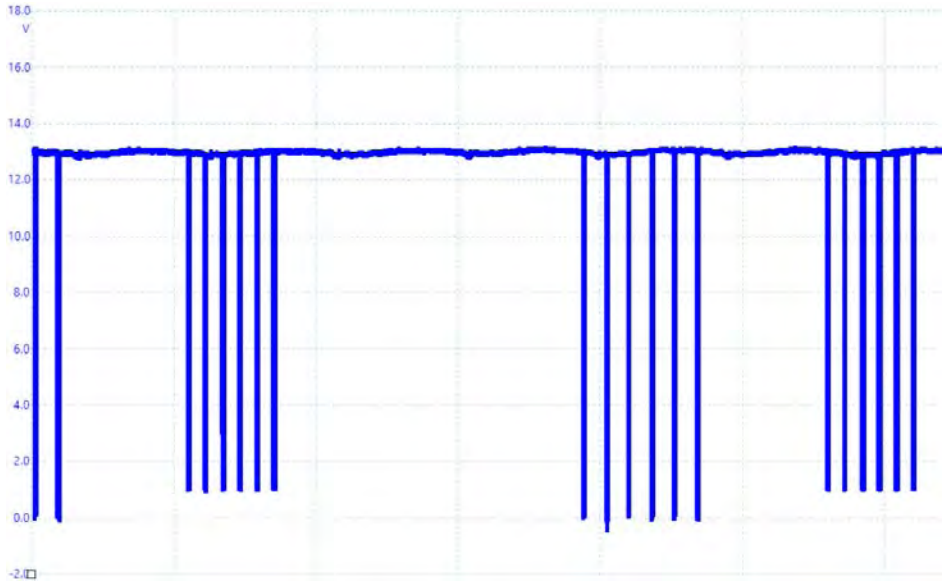

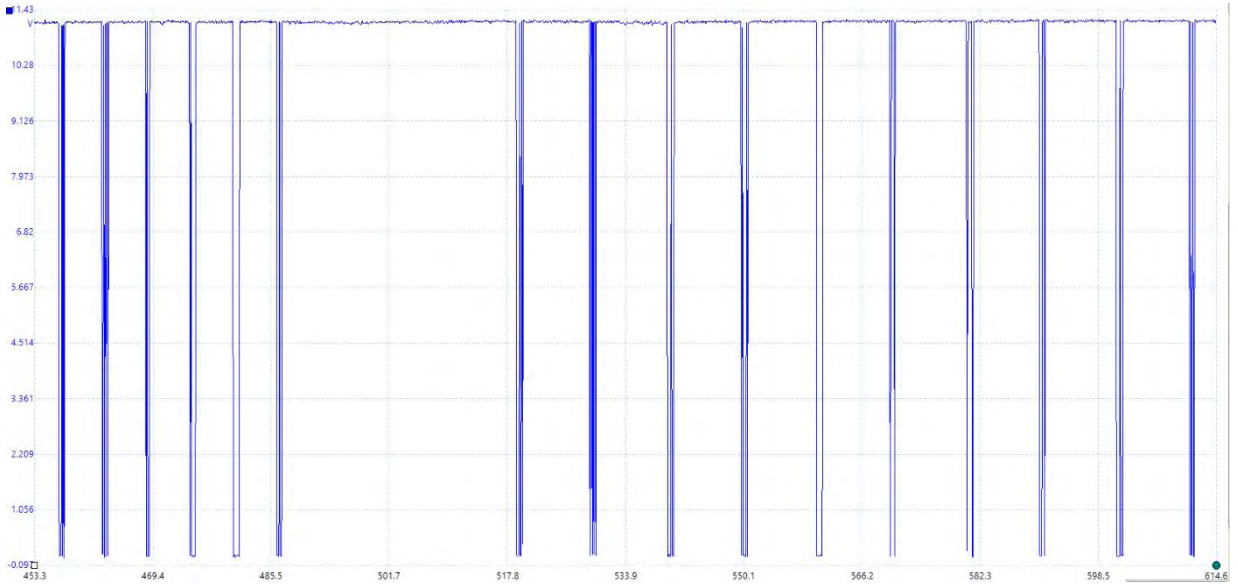

K-LINE OR LIN?

SN65HVDA195-Q1 Automotive LIN and Most ECL Physical Interface

1 Features

- LIN Physical layer specification revision 2.0 compliant and conforms to SAEJ2602 recommended practice for LIN
- LIN Bus speed up to 20-kbps LIN specified maximum and MOST ECL speeds down to 0 Baud
- Supports ISO9141 (k-line)
- Qualified for automotive applications
- Sleep mode: ultra low current consumption, allows wake-up events from LIN bus, wake-up Input (external switch), or host microcontroller
- High-speed receive capable
- ESD protection to ±12 kV (human body model) on LIN pin
- LIN pin handles voltage from –40 V to 40 V
- Survives transient damage in automotive environment (ISO 7637)
- Extended operation with supply from 7 V to 27 V DC (LIN specification 7 V to 18 V)
- Interfaces to microcontroller with 5-V or 3.3-V I/O pins
- Wake-up request on RXD pin
- Control of external voltage regulator (INH pin)
- Integrated pullup resistor and series diode for LIN responder applications
- Low electromagnetic emission (EME), high electromagnetic immunity (EMI)

3 Description

The SN65HVDA195 device is the Local Interconnect Network (LIN) physical interface and MOST ECL interface, which integrates the serial transceiver with wake-up and protection features. The bus is a single-wire bidirectional bus typically used for low-speed in-vehicle networks using data rates to 20 kbps. The device can transmit with an effective data rate of 0 kbps because it does not have dominant state time-out. The protocol output data stream on TXD is converted by the SN65HVDA195 into the bus signal through a current-limited wave-shaping driver as outlined by the LIN physical layer specification revision 2.0. The receiver converts the data stream from the bus and outputs the data stream through RXD. The bus has two states: dominant state (voltage near ground) and the recessive state (voltage near battery). In the recessive state, the bus is pulled high by the SN65HVDA195 internal pullup resistor and series diode, so no external pullup components are required for responder applications. Commander applications require an external pullup resistor (1 kΩ) plus a series diode per the LIN specification.

Device Information

PART NUMBER	PACKAGE(1)	BODY SIZE (NOM)
SN65HVDA195-Q1	SOIC (8)	4.90 mm × 3.91 mm

LIN BUS

Local Interface Network

LIN BUS networks are very similar to the other single wire networks, with the exception that they are not wired to the DLC.

These networks utilize a Primary module, each Secondary module is wired to the Primary on the LIN BUS, the LIN BUS does not lead back to the DLC at all.

The Secondary modules on the BUS typically can not communicate directly with the scan tool.

LIN Bus

Another type of single wire network that will be discussed is a LIN bus.

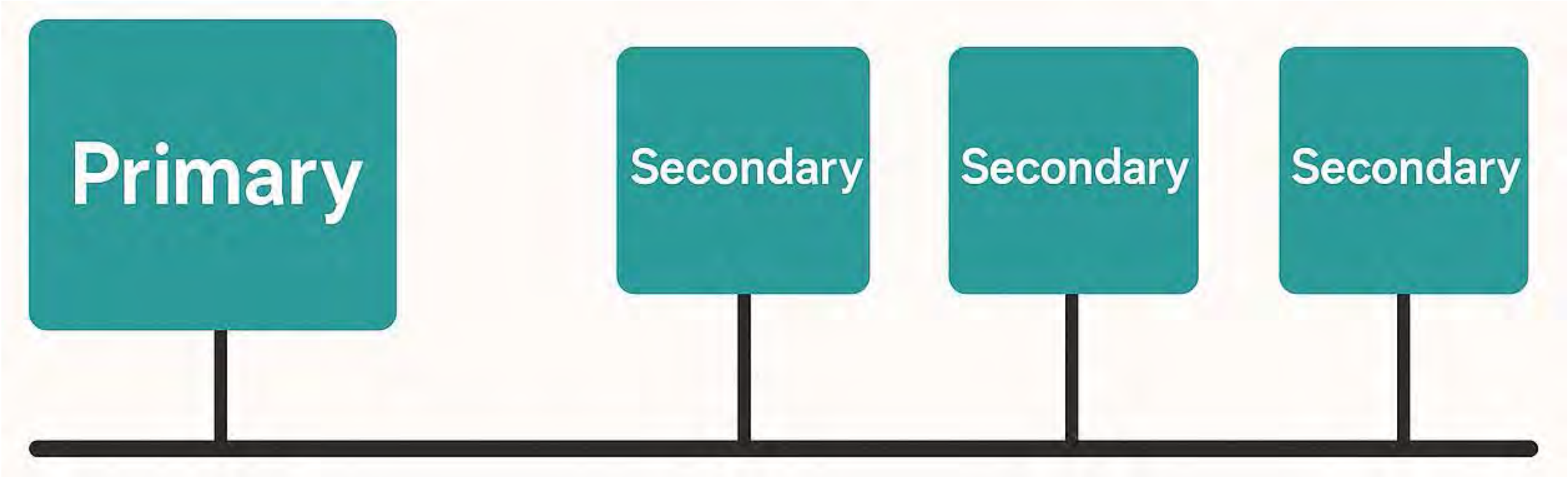

LIN Bus In a Nutshell!

LIN is a low-cost, single-wire, Primary/Secondary network used for **non-critical communication** in vehicles.

- Speed: Up to **20 kbps**
- Topology: **1 master + up to 15 slaves**
- Medium: **Single wire + ground**
- No arbitration → master controls all timing

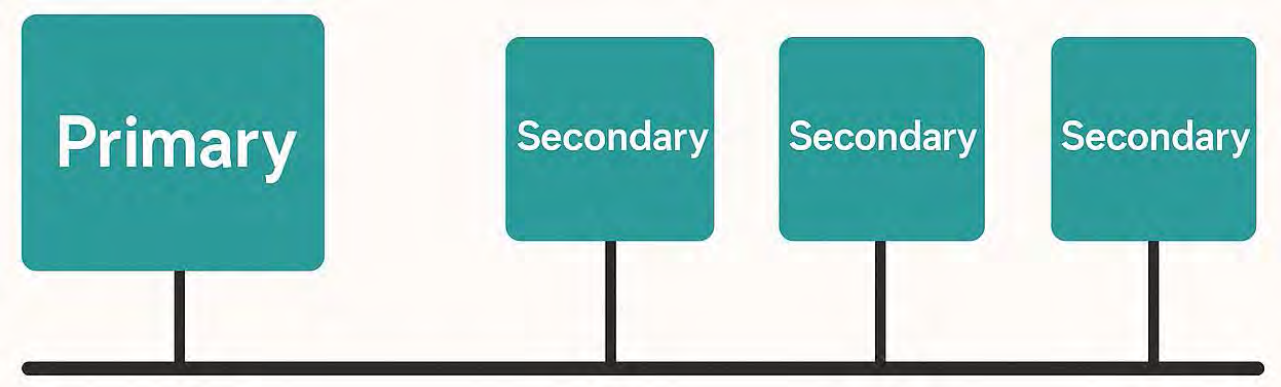

What is in a Message?

LIN TP frame types (LIN Bus Transport Protocol, ISO 17987-2)

Common LIN Network Architectures

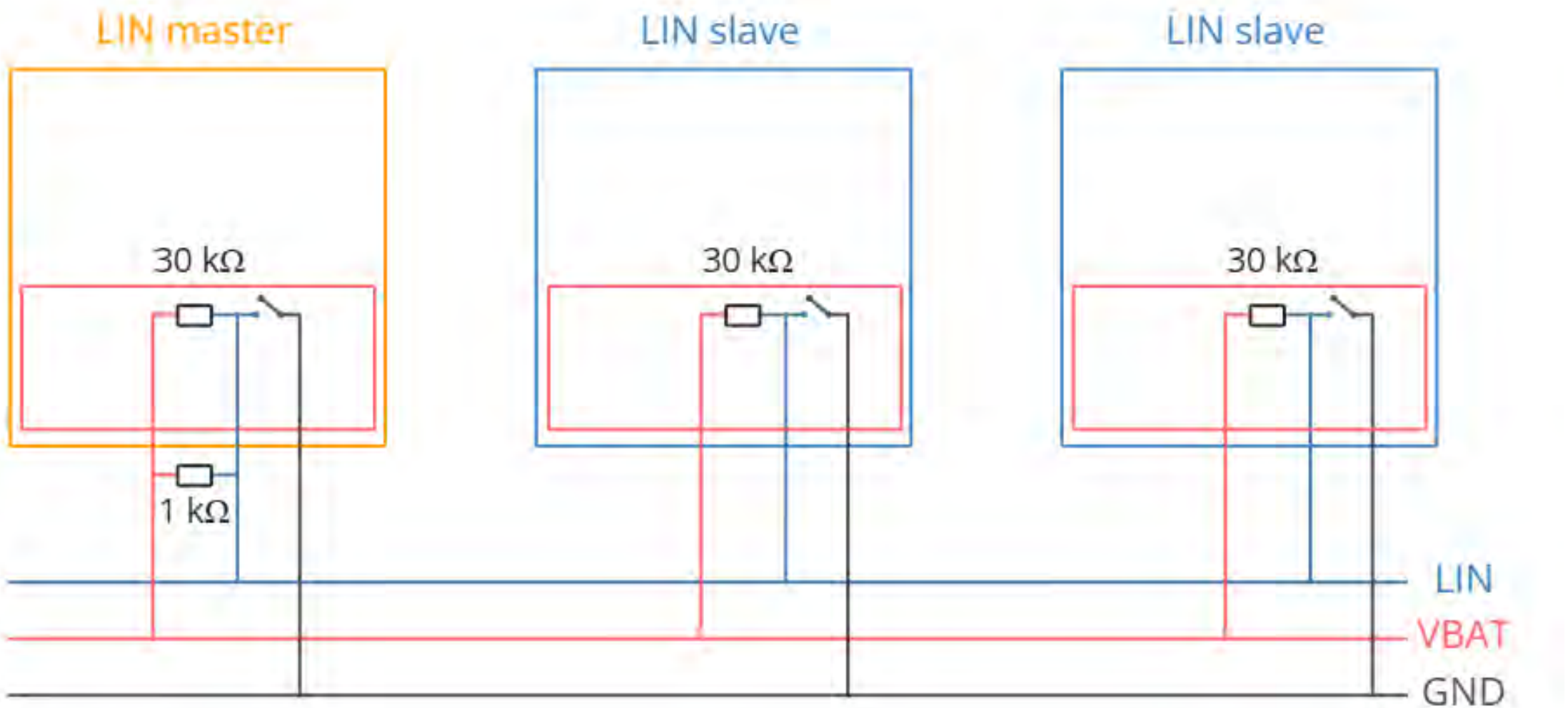

LIN Bus Function

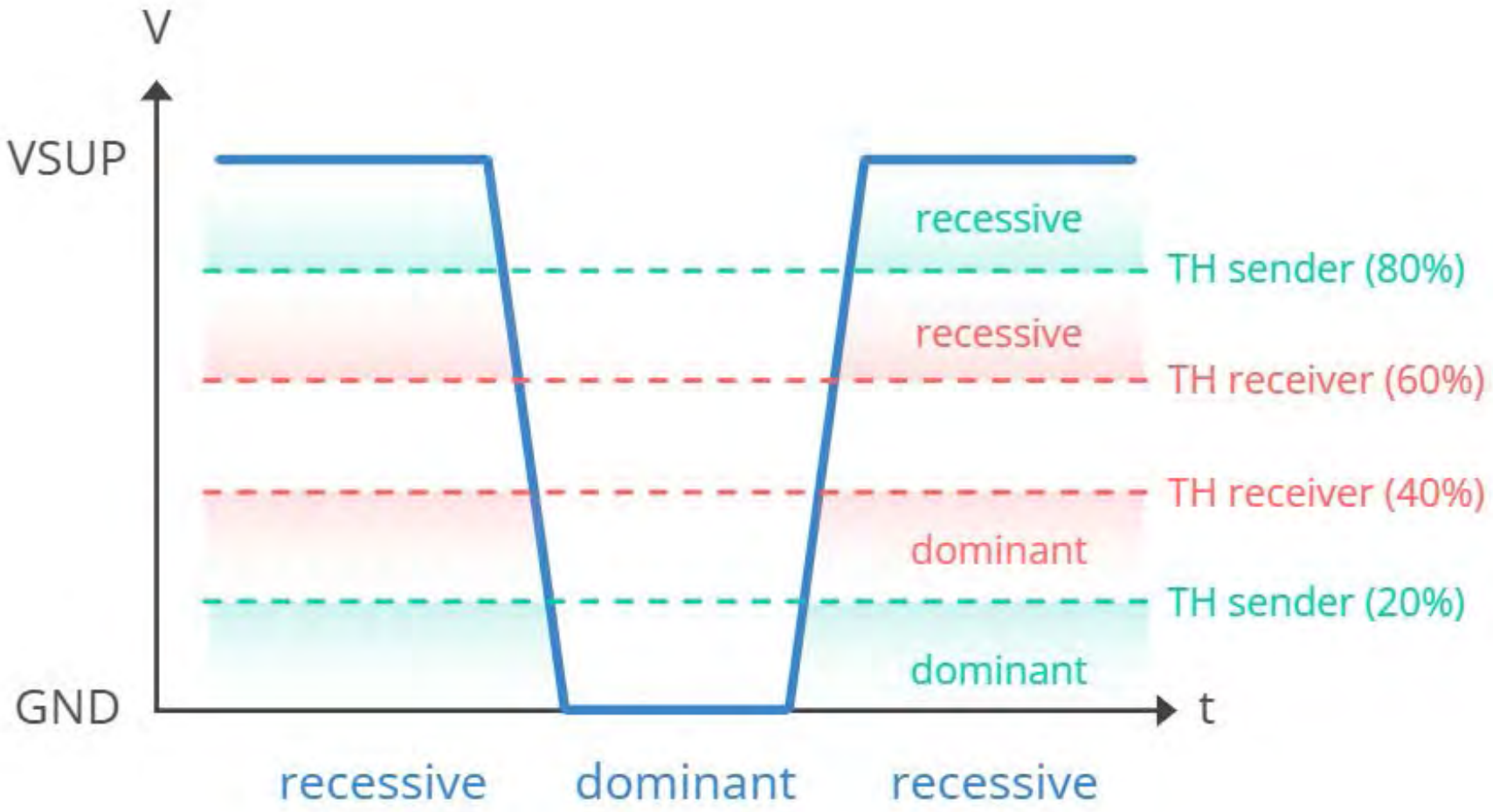

Enables bit wise communication by switching the single wire LIN bus from:

high (recessive, logic 1)

To

low (dominant, logic 0)

What Makes that Message Happen?

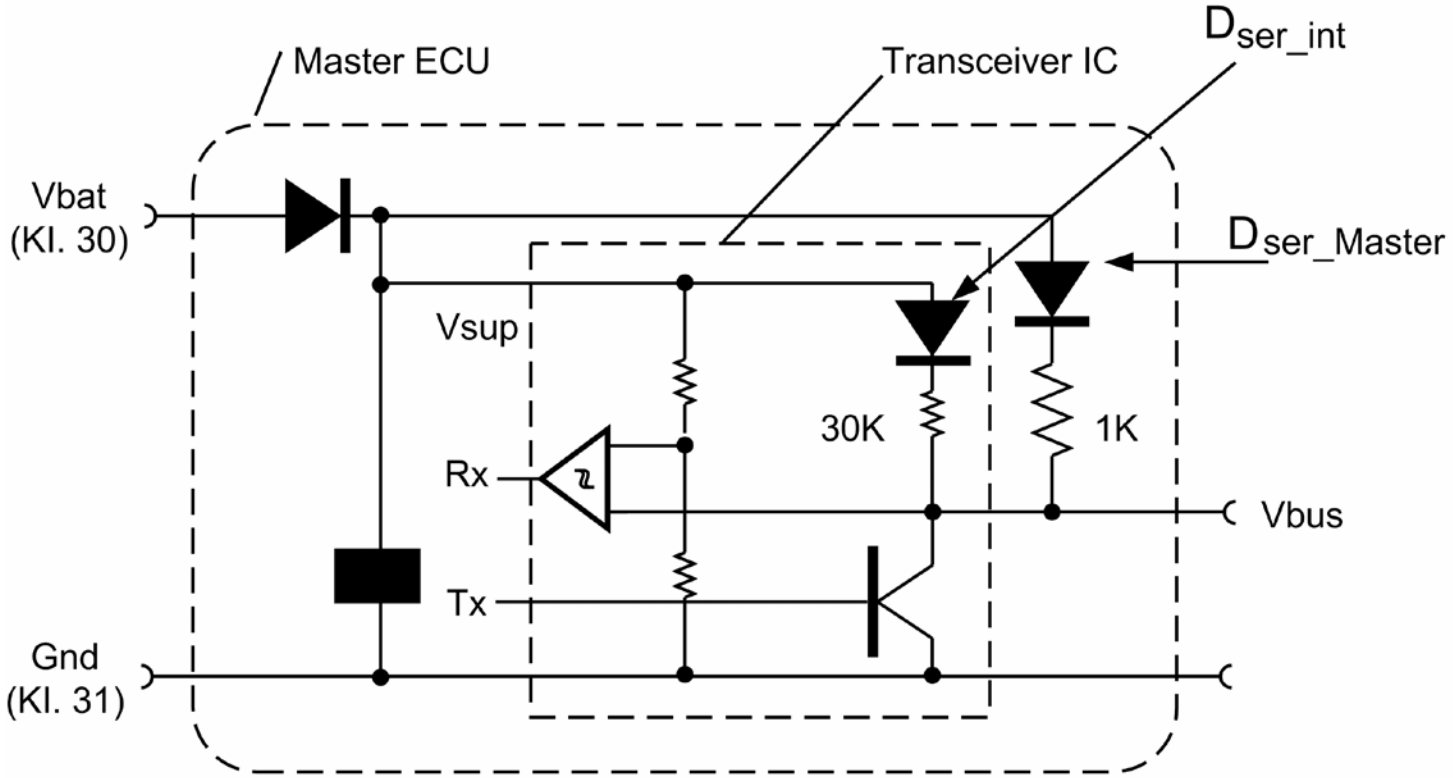

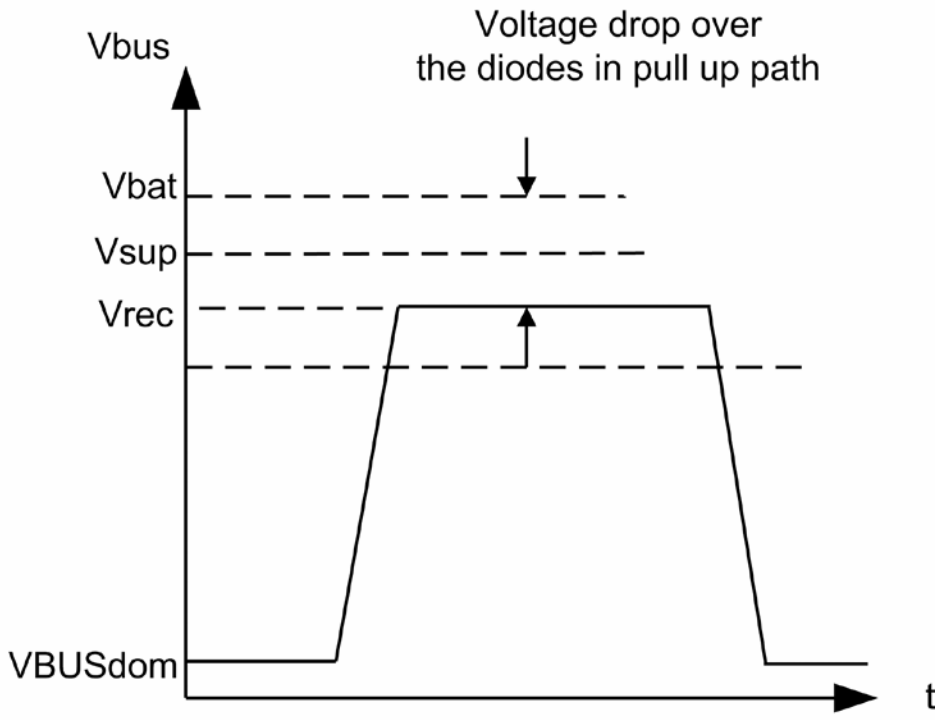

LIN BUS

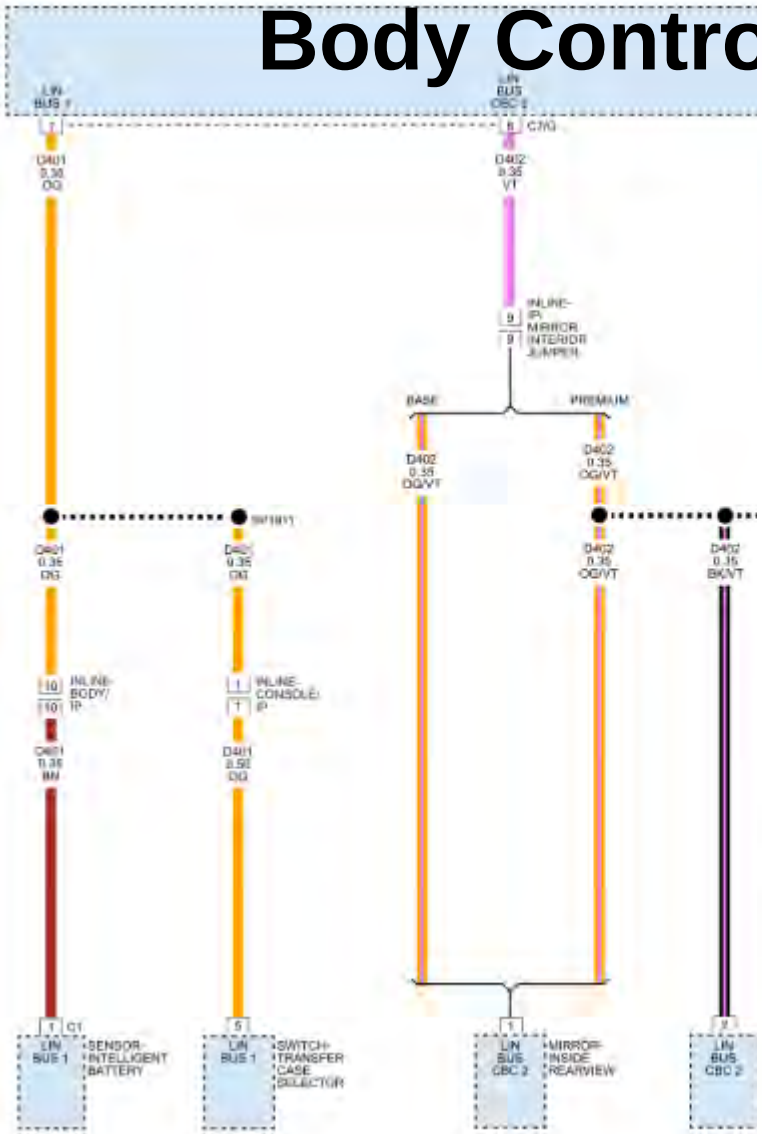

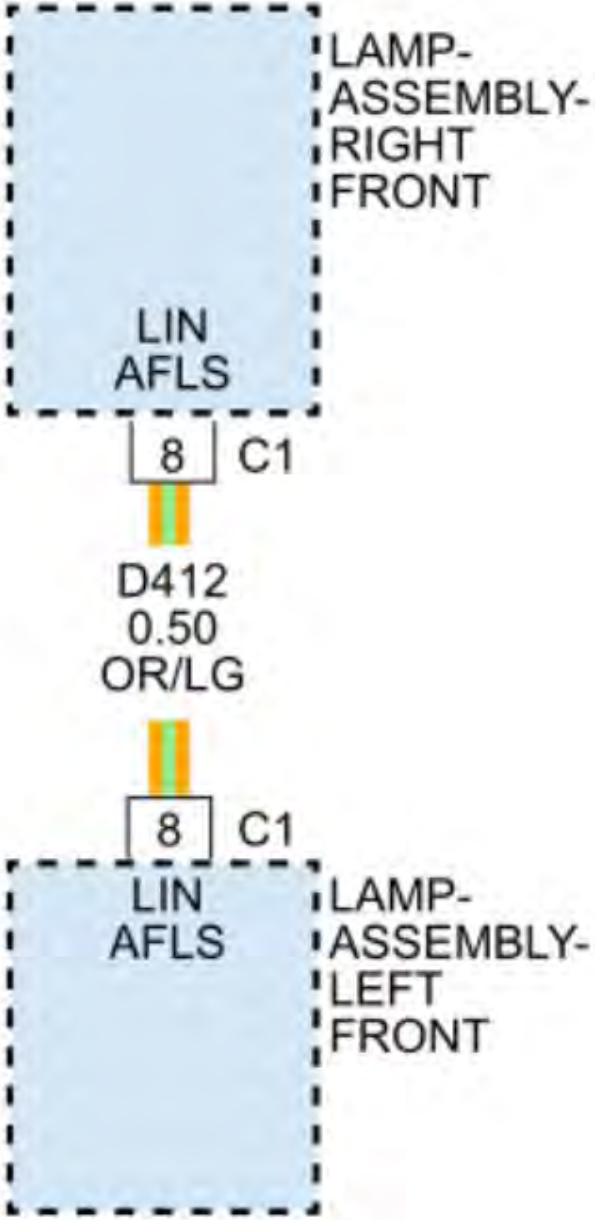

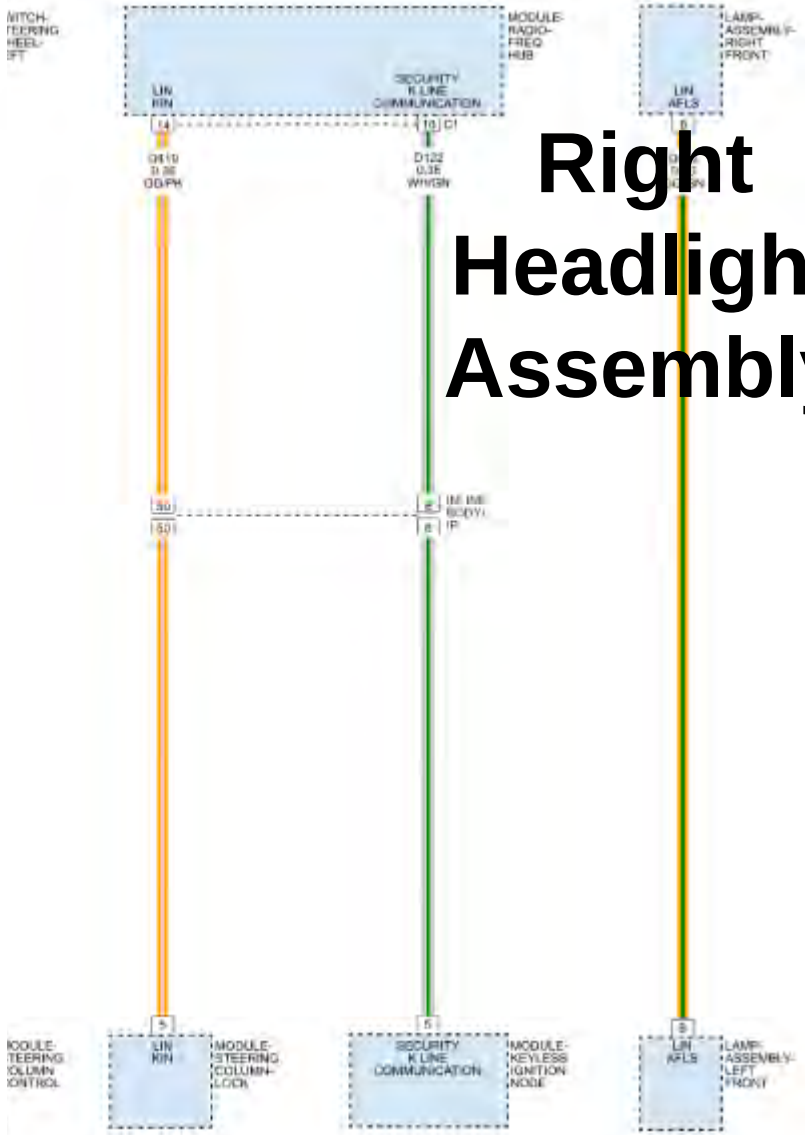

Right Headlight Assembly

Class 2 / SW-CAN / PCI BUS

Diagnosis of the Class 2 / SW-CAN / PCI BUS network is very similar to any single circuit. You check for short to power, or ground and find the fault. And under most circumstances a single module is at fault.

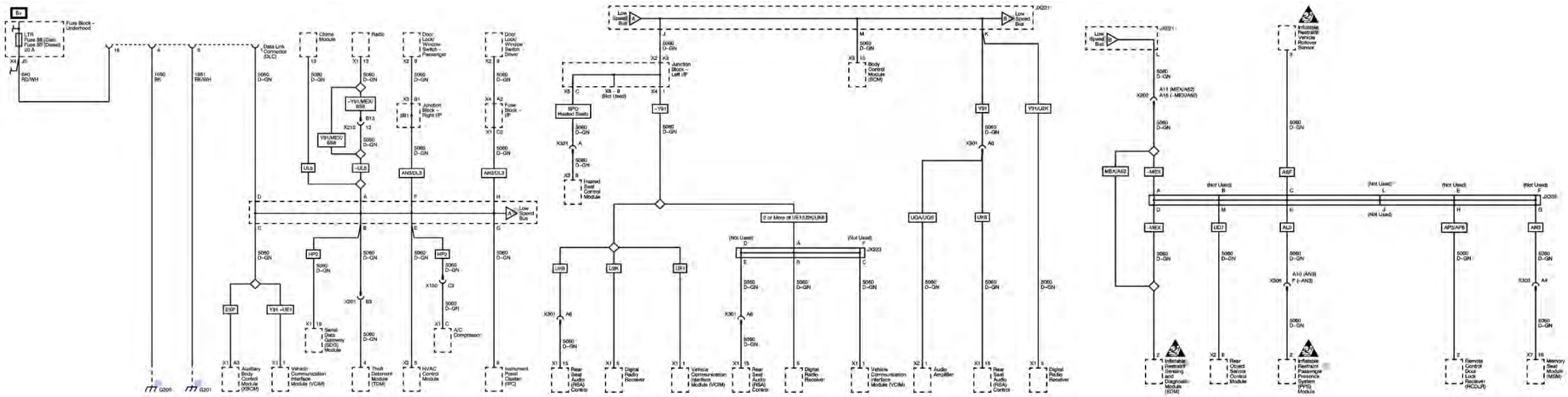

Class 2 / SW-CAN / PCI BUS

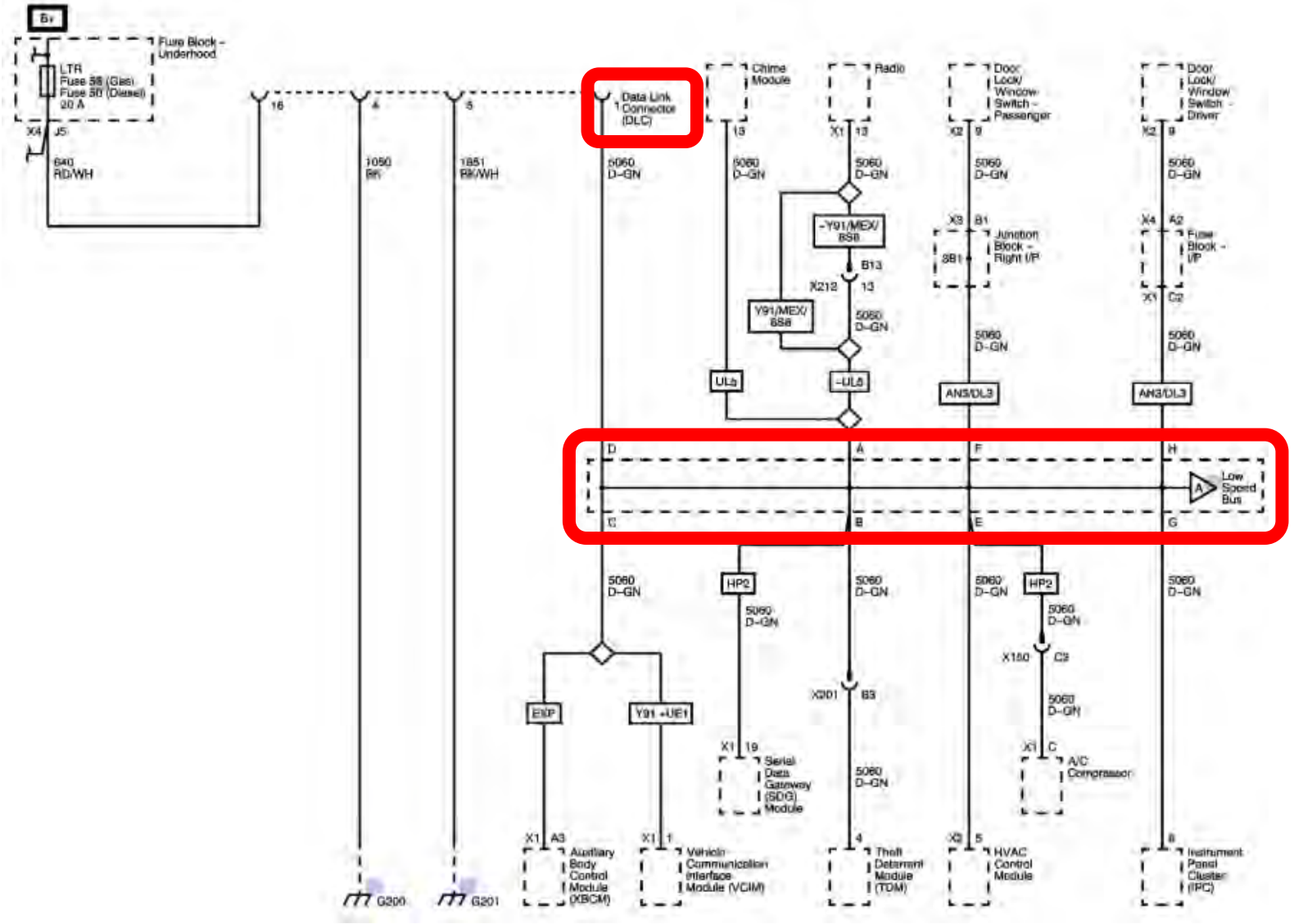

Looking at this diagram, The SW-CAN line goes from PIN 1.

Down to the Splice pack, where all the class 2 data lines converge.

This is our test point for best results.

Class 2 / SW-CAN / PCI BUS

This method applies to ALL 3 types of networks.

Class 2 / SW-CAN / PCI BUS

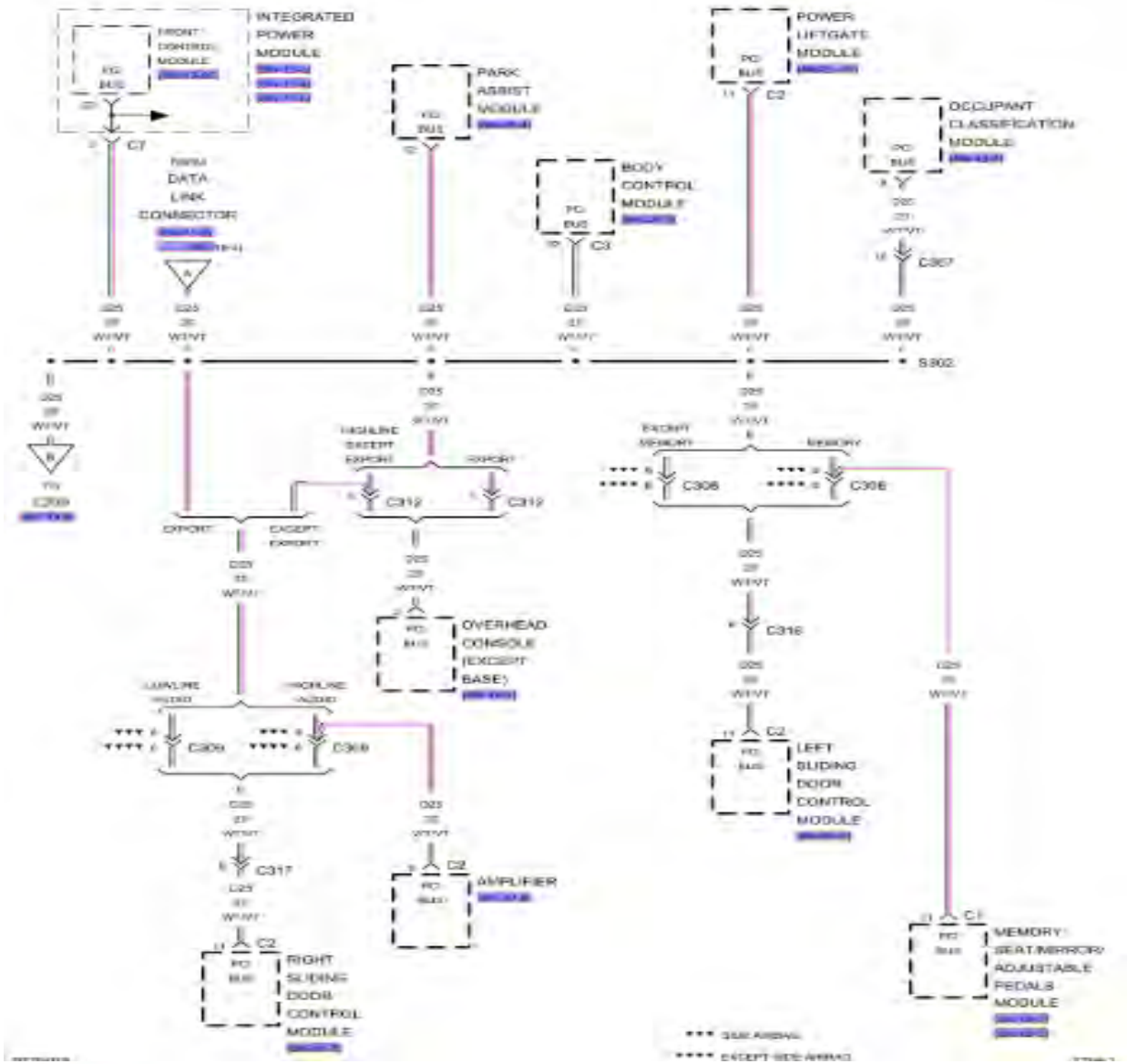

2007 Dodge Journey

Chrysler PCI BUS Example

Class 2 / SW-CAN / PCI BUS

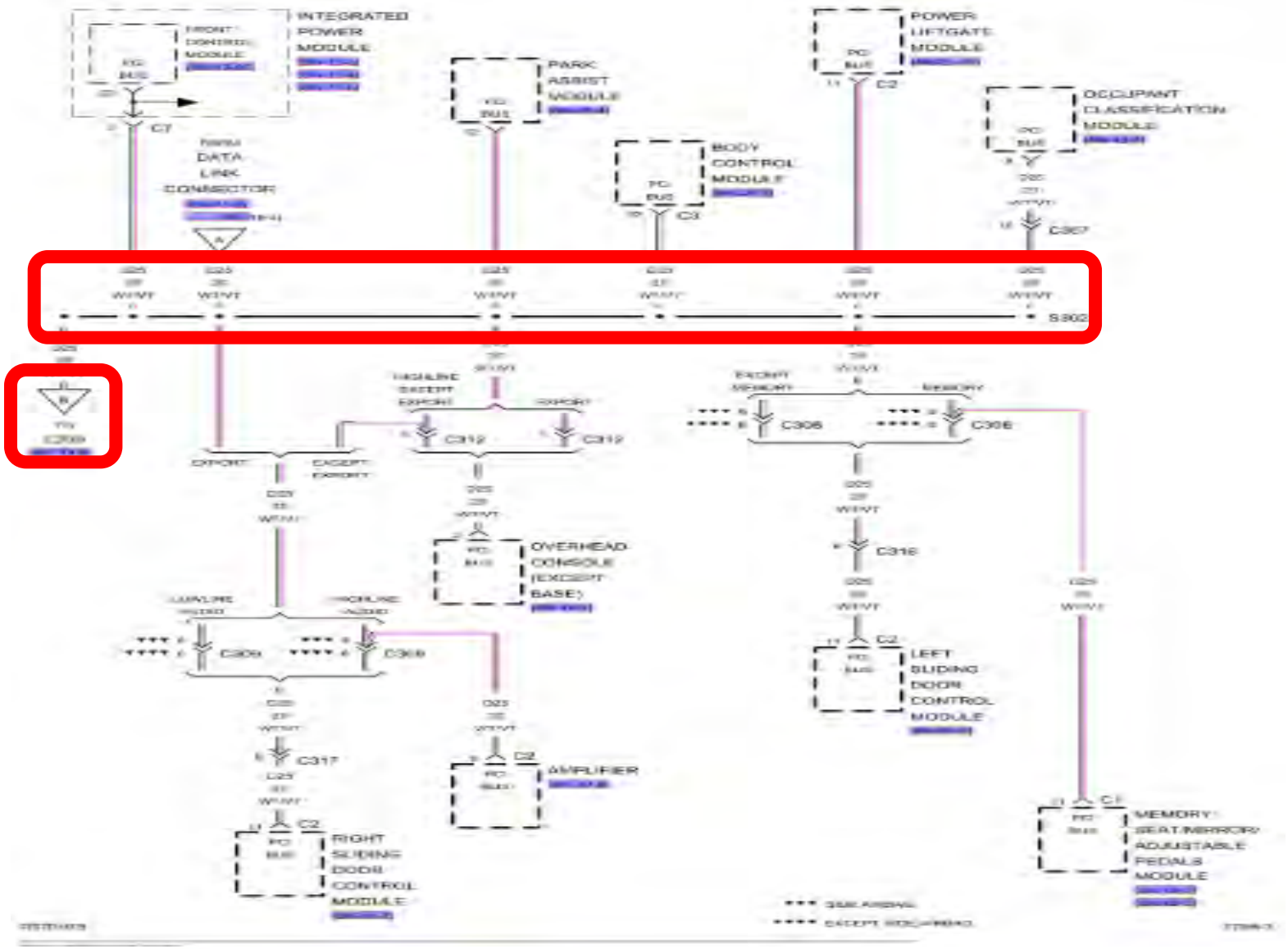

This comes from DLC PIN 2

This splice is in the harness…

I don't know where….

Its easier to unplug each component than to find these splices.

LIN BUS – CASE STUDY 1

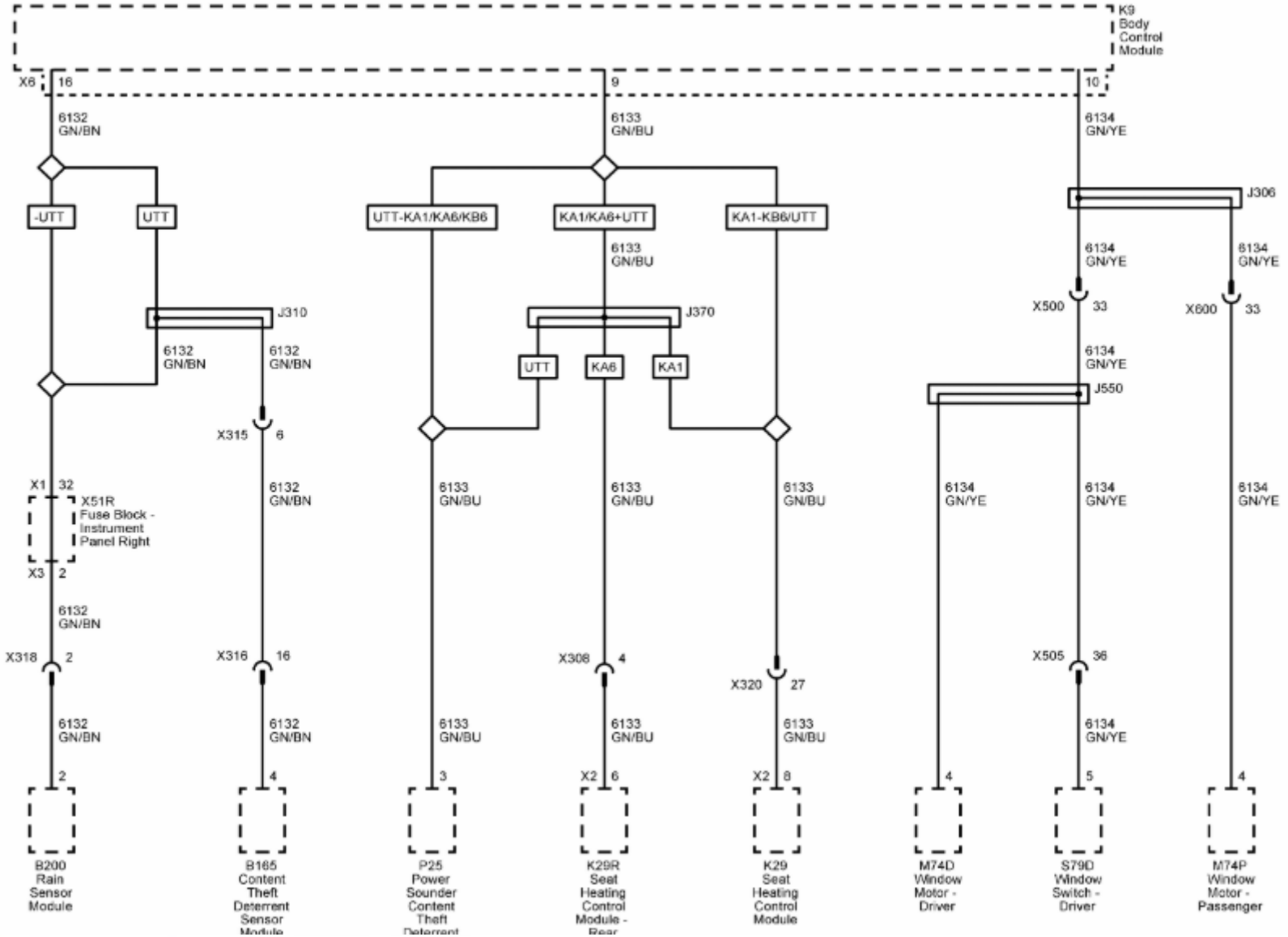

2018 GMC Yukon

LIN bus has a primary and secondary configuration.

Making scan tool utilization paramount.

ALWAYS START WITH A SCAN!

LIN BUS – CASE STUDY 1

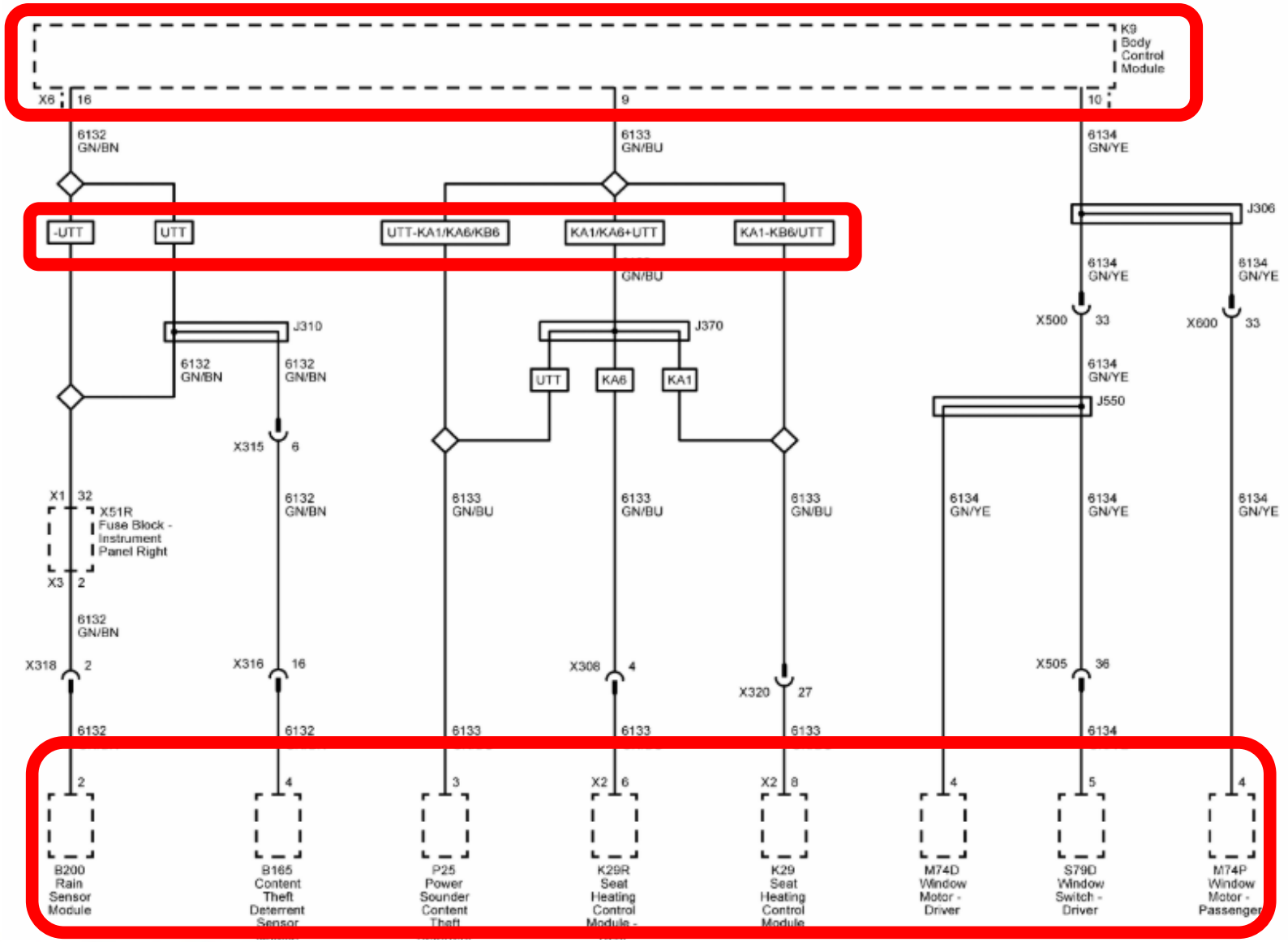

Customer concern is that the remote start does not function.

Vehicle has a MIL

PCM DTC: U1510 Lose of communication with module on LIN BUS

LIN BUS – CASE STUDY 1

DTC U1500-U15FF (DATA COMMUNICATIONS)

Diagnostic Instructions

- Perform the Diagnostic System Check - Vehicle prior to using this diagnostic procedure.
- Review Strategy Based Diagnosis for an overview of the diagnostic approach.
- Diagnostic Procedure Instructions provides an overview of each diagnostic category.

DTC Descriptor

For device DTC descriptors, refer to Control Module U Code List .

Diagnostic Fault Information

Circuit	Short to Ground	Open/High Resistance	Short to Voltage	Signal Performance
B+	U1500-U15BF	U1500-U15BF	—	—
Ignition	U1500-U15BF	U1500-U15BF	—	—
LIN Serial Data	U1500-U15BF	U1500-U15BF	U1500-U15BF	—
Ground	—	U1500-U15BF	—	—

Circuit/System Description

The Local Interconnect Network (LIN) Bus consists of a single wire with a transmission rate of 10.417 Kbit/s. The serial data is transmitted over a LIN circuit between a master control module and other LIN devices within a particular subsystem. If serial data communication is lost between any of the LIN devices on the LIN bus network, the master control module will set a no communication code against the non-communicating LIN device.

Conditions for Running the DTC

The system voltage is between 9–16 V.

Conditions for Setting the DTC

A supervised periodic message that includes the transmitter device availability has not been received.

LIN BUS – CASE STUDY 1

Circuit	Short to Ground	Open/High Resistance	Short to Voltage	Signal Performance
B+	U1500-U15BF	U1500-U15BF	—	—
Ignition	U1500-U15BF	U1500-U15BF	—	—
LIN Serial Data	U1500-U15BF	U1500-U15BF	U1500-U15BF	—
Ground	—	U1500-U15BF	—	—

LIN BUS – CASE STUDY 1

DTC U1500-U15FF (DATA COMMUNICATIONS)

Diagnostic Instructions

- Perform the Diagnostic System Check - Vehicle prior to using this diagnostic procedure.
- Review Strategy Based Diagnosis for an overview of the diagnostic approach.
- Diagnostic Procedure Instructions provides an overview of each diagnostic category.

DTC Descriptor

Fo

Di

DTC Descriptor

For device DTC descriptors, refer to Control Module U Code List .

LIN Serial Data	U1500-U15BF	U1500-U15BF	U1500-U15BF	—
Ground	—	U1500-U15BF	—	—

Circuit/System Description

The Local Interconnect Network (LIN) Bus consists of a single wire with a transmission rate of 10.417 Kbit/s. The serial data is transmitted over a LIN circuit between a master control module and other LIN devices within a particular subsystem. If serial data communication is lost between any of the LIN devices on the LIN bus network, the master control module will set a no communication code against the non-communicating LIN device.

Conditions for Running the DTC

The system voltage is between 9–16 V.

Conditions for Setting the DTC

A supervised periodic message that includes the transmitter device availability has not been received.

LIN BUS – CASE STUDY 1

The DTC Descriptor list gives us MAJOR tips on how we are going to determine what is not communicating!

This again gives us MORE evidence that we should heavily weigh on: understanding the system and reading service information.

U1510	A11 Radio Lost Communication with A20 Radio/HVAC Control / P17 Info Display Module on LIN Bus
	K9 Body Control Module Lost Communication with B67 Ultrasonic Intrusion Sensor / B165 Content Theft Deterrent Sensor Module on LIN Bus
	K20 Engine Control Module Lost Communication with M96 Active Grille Air Shutter Actuator / M60A Active Grille Air Shutter 1 Motor Module on LIN Bus
	K33 HVAC Control Module Lost Communication with A26 HVAC Controls / A20 Radio/HVAC Controls / P17 Info Display Module on LIN Bus
	K33 HVAC Control Module Lost Communication with A34 HVAC Controls – Auxiliary on LIN Bus
	K39 Liftgate Control Module Lost Communication with K171 Hands-Free Liftgate Sensor Control Module / S45A Liftgate Control Switch – Exterior on LIN
	K160 Brake System Control Module Lost Communication with B80 Park Brake Switch on LIN Bus
	P16 Instrument Cluster Lost Communication with S70D Steering Wheel Controls Switch - Right Upper / S70R Steering Wheel Controls Switch - Right on

LIN BUS – CASE STUDY 1

DATA COMMUNICATION SCHEMATICS (DATA COMMUNICATIONS)

Figure 1: Data Link Power and Ground, and Low Speed GMLAN (1 of 2)

Figure 2: Data Link Power and Ground, and Low Speed GMLAN (2 of 2)

Figure 3: Gateway Isolated Low Speed GMLAN

Figure 4: High Speed GMLAN (1 of 2)

Figure 5: High Speed GMLAN (2 of 2)

Figure 6: Gateway Expansion High Speed GMLAN

Figure 7: Gateway Isolated High Speed GMLAN

Figure 8: MOST Bus

Figure 9: MOST Bus Communications Enable

Figure 10: Chassis High Speed GMLAN (1 of 2)

Figure 11: Chassis High Speed GMLAN (2 of 2)

Figure 12: Powertrain High Speed GMLAN (L83/L86)

Figure 13: Object High Speed GMLAN (UGN+Z75) (1 of 2)

Figure 14: Object High Speed GMLAN (UGN+Z75) (2 of 2)

Figure 15: Linear Interconnect Network (LIN) Busses (1 of 3)

Figure 16: Linear Interconnect Network (LIN) Busses (2 of 3)

Figure 17: Linear Interconnect Network (LIN) Busses (3 of 3) (X88 or Z88)

Figure 18: Linear Interconnect Network (LIN) Busses (3 of 3) (Z75)

Figure 19: Accessory Wakeup

Figure 20: Communications Enable

Figure 21: Communications Enable - Object High Speed GMLAN (UGN)

There are many communication wiring diagrams.

We found the PCMs LIN BUS network in the “Linear Interconnect Network (LIN) Busses (2 of 3)” Diagram

LIN BUS – CASE STUDY 1

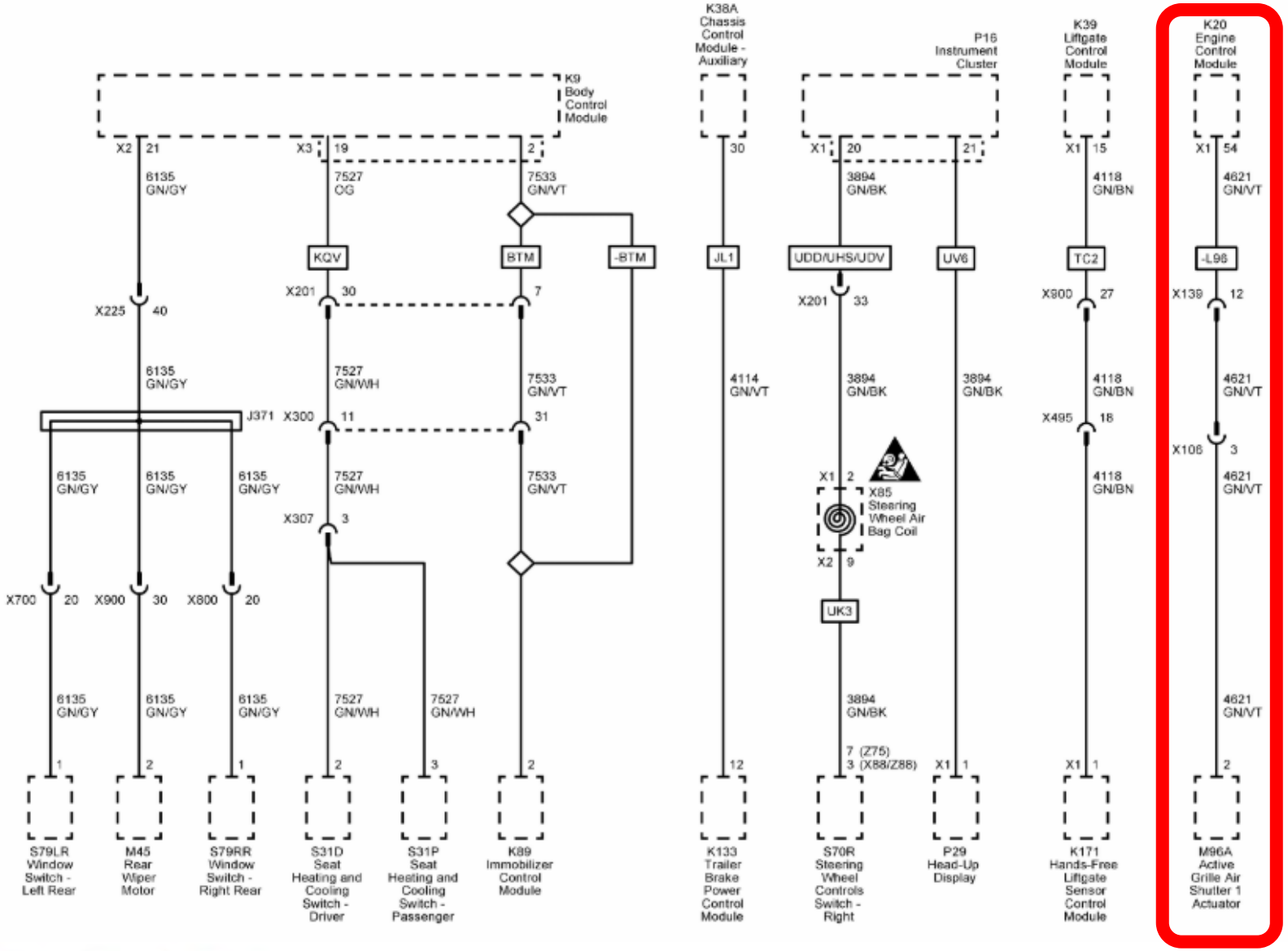

The DTC descriptor list showed the U1510 could be from either the "M60A Active Grille Air Shutter 1 Motor Module" or it could be the M96 "Active Grille Air Shutter Actuator" this vehicle only has the M60 Actuator.

LIN BUS – CASE STUDY 1

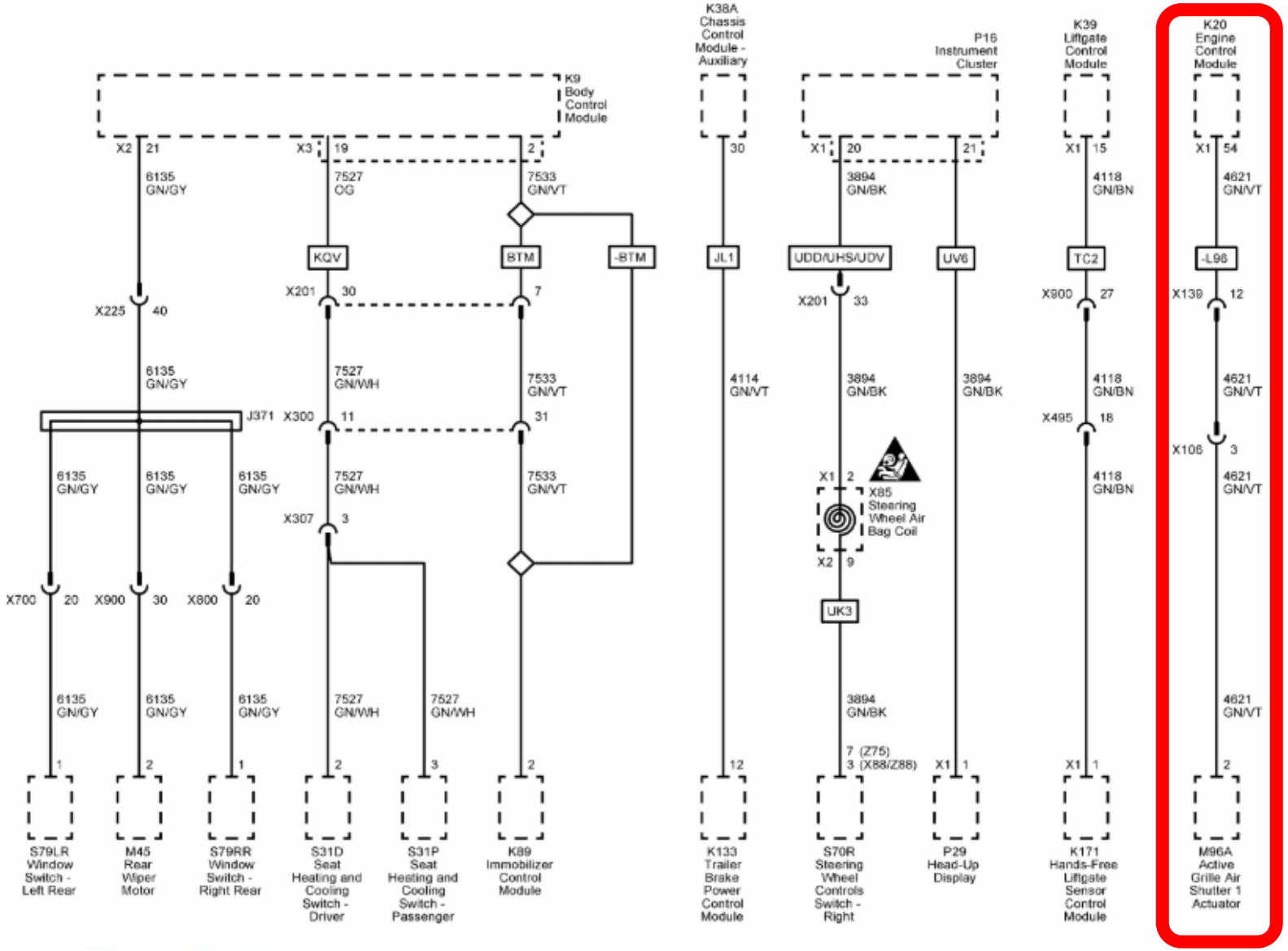

Now knowing what module is the issue…. How do we test the circuit?

At this point we go about this like it is any other module!

Only LIN BUS modules are easier!

LIN BUS – CASE STUDY 2

2007 BMW 335i (E90)

Post collision repair there is a headlight fault illuminated on the instrument cluster, and on the message center.

The left headlight assembly was replaced, no modules in the headlight were replaced, only the housing.

LIN BUS – CASE STUDY 2

Autologic Quick Test Report

VIN	**WBAVB73557VF50436**
Manufacturer	**BMW**
Vehicle	**E90 335i N54 52 door Saloon**
Year	**03/2007**
Country / Area	**USA**
Battery voltage	**14.1V**
Autologic information	**A032435, BMW v3.187.6, Main v5.0.282**
Time / Date	**14:05 12/12/2019**

Modules with faults:

FOOTWELL MODULE (FRM) (frm_70)

A8AF	Fog light, right, faulty, E90 M3: daytime running light, right, faulty
A8AD	Clearance light, right, faulty
A8AE	Fog light, left, faulty, E90 M3: daytime running light, left, faulty
A8A9	High beam/turn-off light, right, faulty
9CBF	Communication with step motor controller on the left disrupted
9CC0	Communication with step motor controller on the right disrupted
A8AB	Dipped beam, right, faulty
A8B1	Direction indicator, front right, faulty
A8C3	Second brake light/adaptive brake light, left, faulty
A8B0	Tail lamp, left, faulty
9CBA	Communication with lin operator unit disturbed
A8AF	Fog light, right, faulty, E90 M3: daytime running light, right, faulty
A8AD	Clearance light, right, faulty
A8AE	Fog light, left, faulty, E90 M3: daytime running light, left, faulty

DYNAMIC STABILITY CONTROL (DSC) (dsc_87) — **2 Faults**

5E19	Engine management: interface
5DE1	Brake-pad wear: plausibility, rear axle

Modules with no faults:

Autologic Quick Test Report

VIN	**WBAVB73557VF50436**
Manufacturer	**BMW**
Vehicle	**E90 335i N54 52 door Saloon**
Year	**03/2007**
Country / Area	**USA**
Battery voltage	**14.1V**
Autologic information	**A032435, BMW v3.187.6, Main v5.0.282**
Time / Date	**14:05 12/12/2019**

LIN BUS – CASE STUDY 2

Autologic Quick Test Report

VIN	WBAVB73557VF50436
Manufacturer	BMW
Vehicle	E90 335i N54 52 door Saloon
Year	03/2007
Country / Area	USA
Battery voltage	14.1V
Autologic information	A032435, BMW v3.187.6, Main v5.0.282
Time / Date	14:05 12/12/2019

Modules with faults:

FOOTWELL MODULE (FRM) (frm_70)

A8AF	Fog light, right, faulty, E90 M3: daytime running light, right, faulty
A8AD	Clearance light, right, faulty
A8AE	Fog light, left, faulty, E90 M3: daytime running light, left, faulty
A8A9	High beam/turn-off light, right, faulty
9CBF	Communication with step motor controller on the left disrupted
9CC0	Communication with step motor controller on the right disrupted
A8AB	Dipped beam, right, faulty
A8B1	Direction indicator, front right, faulty
A8C3	Second brake light/adaptive brake light, left, faulty
A8B0	Tail lamp, left 1, faulty
9CBA	Communication with lin operator unit disturbed
A8AF	Fog light, right, faulty, E90 M3: daytime running light, right, faulty
A8AD	Clearance light, right, faulty
A8AE	Fog light, left, faulty, E90 M3: daytime running light, left, faulty

DYNAMIC STABILITY CONTROL (DSC) (dsc_87)

5E19	Engine management: interface
5DE1	Brake-pad wear: plausibility, rear axle

Modules with no faults:

Although BMW codes can be cryptic, service information is on the factory scan tool as a guided fault function, or through AOS.

We can see that by the Codes in the FRM (Footwell Module) we have Comm issues (9XXX Codes) with the headlight motors.

Bi-directional controls fail!

LIN BUS – CASE STUDY 2

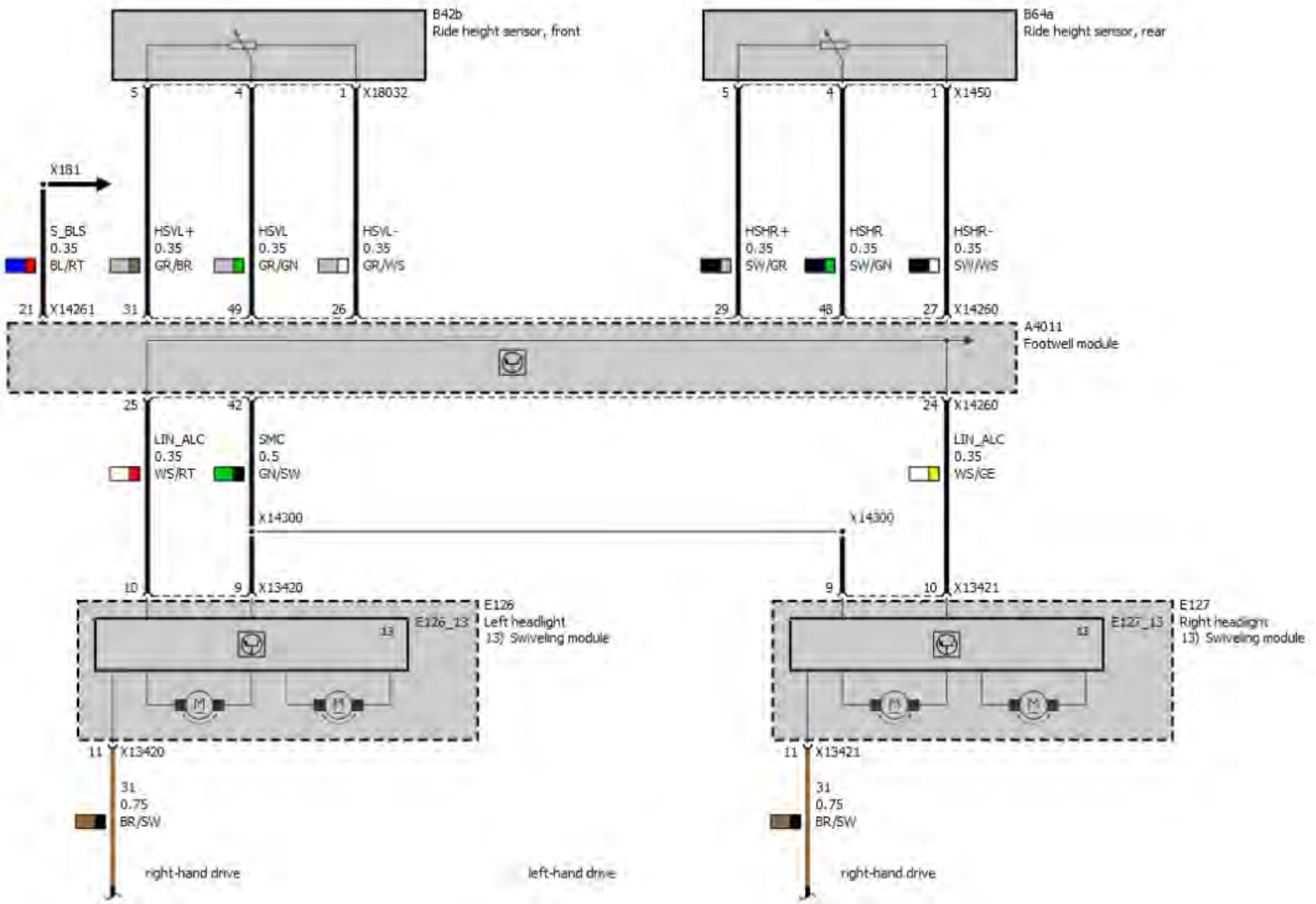

Looking at the wiring diagram we quickly find that this “complicated” German engineered car still has simple LIN bus modules.

Testing them is the same…… with a twist!

LIN BUS – CASE STUDY 2

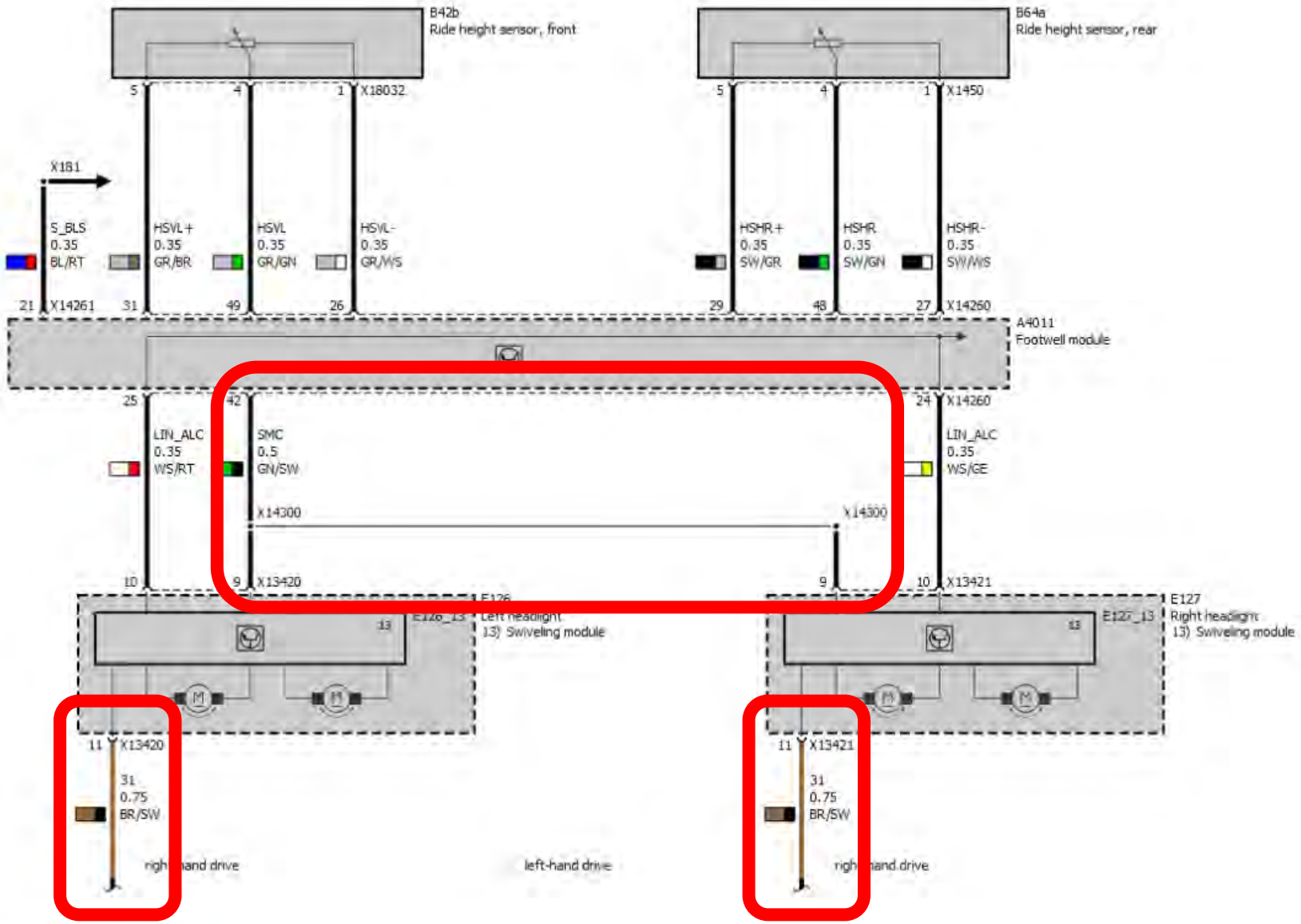

Our initial testing is within our normal testing path!

Test the module powers.

Test the module grounds.

Now for the Communications!

LIN BUS – CASE STUDY 2

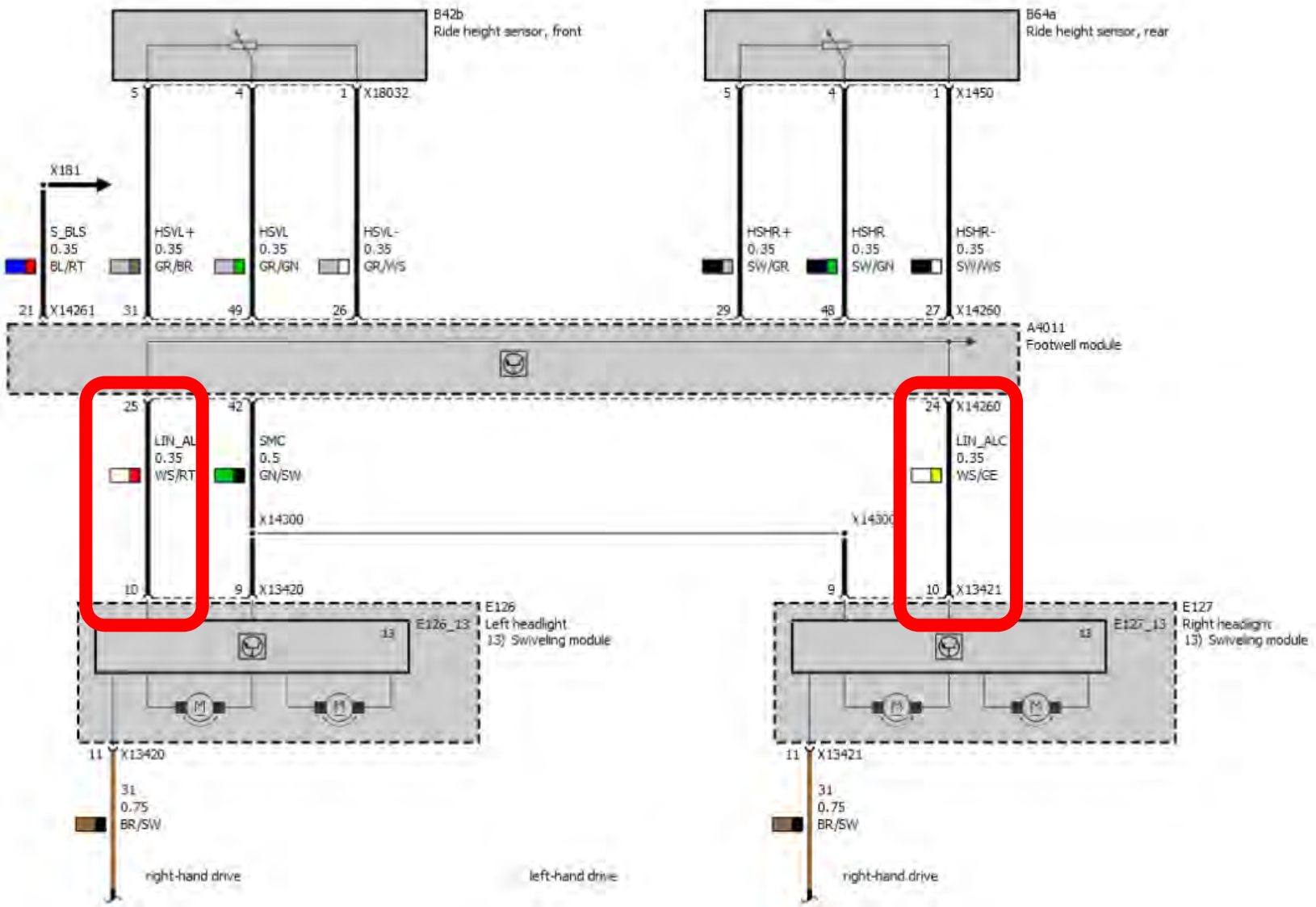

This car got me. Well mostly!

There was a twist to my diagnosis.

I pulled each connector, and found good comm signal from the FRM…

OTHER LIN BUS VARIANTS

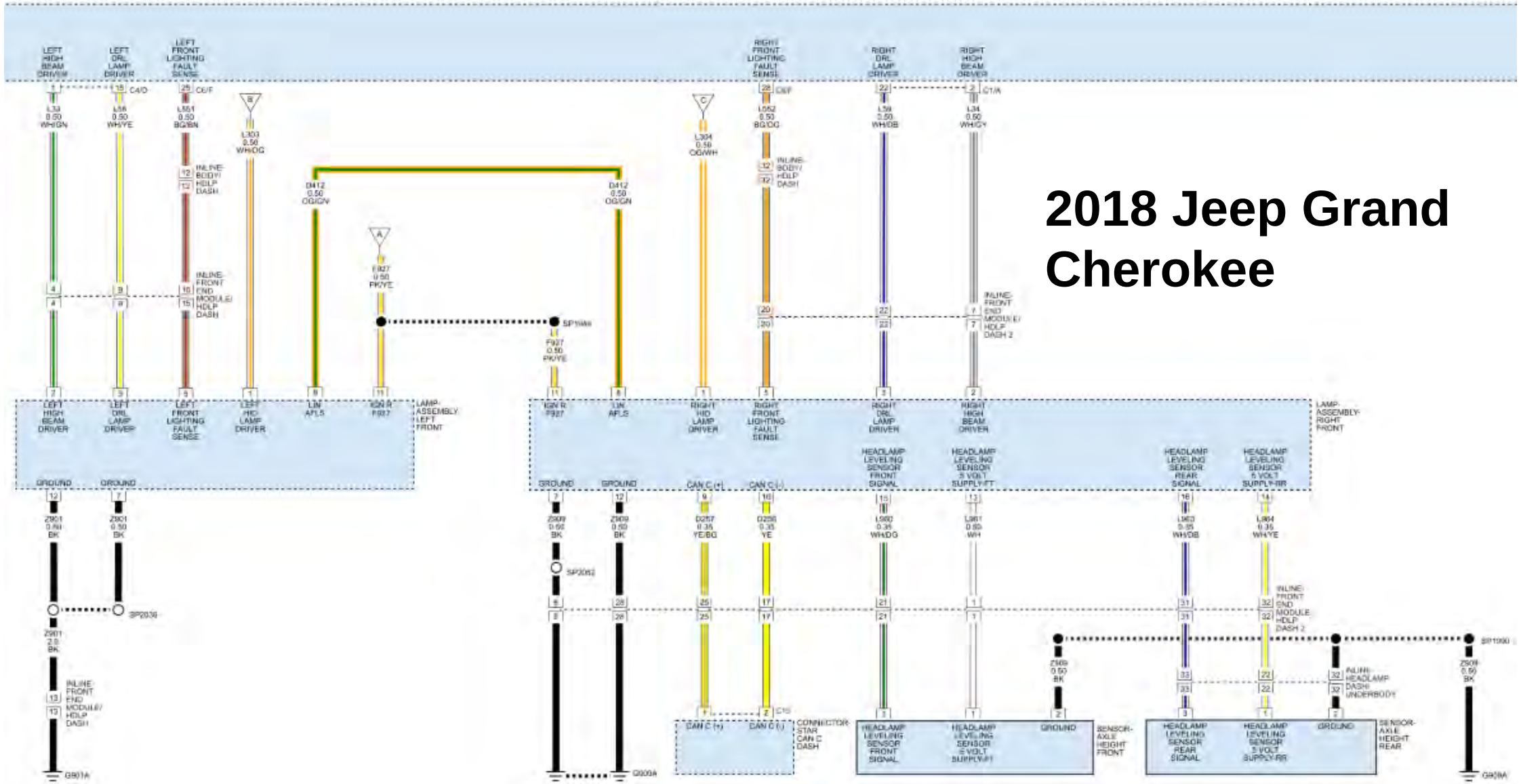

2018 Jeep Grand Cherokee

2018 Jeep Grand Cherokee

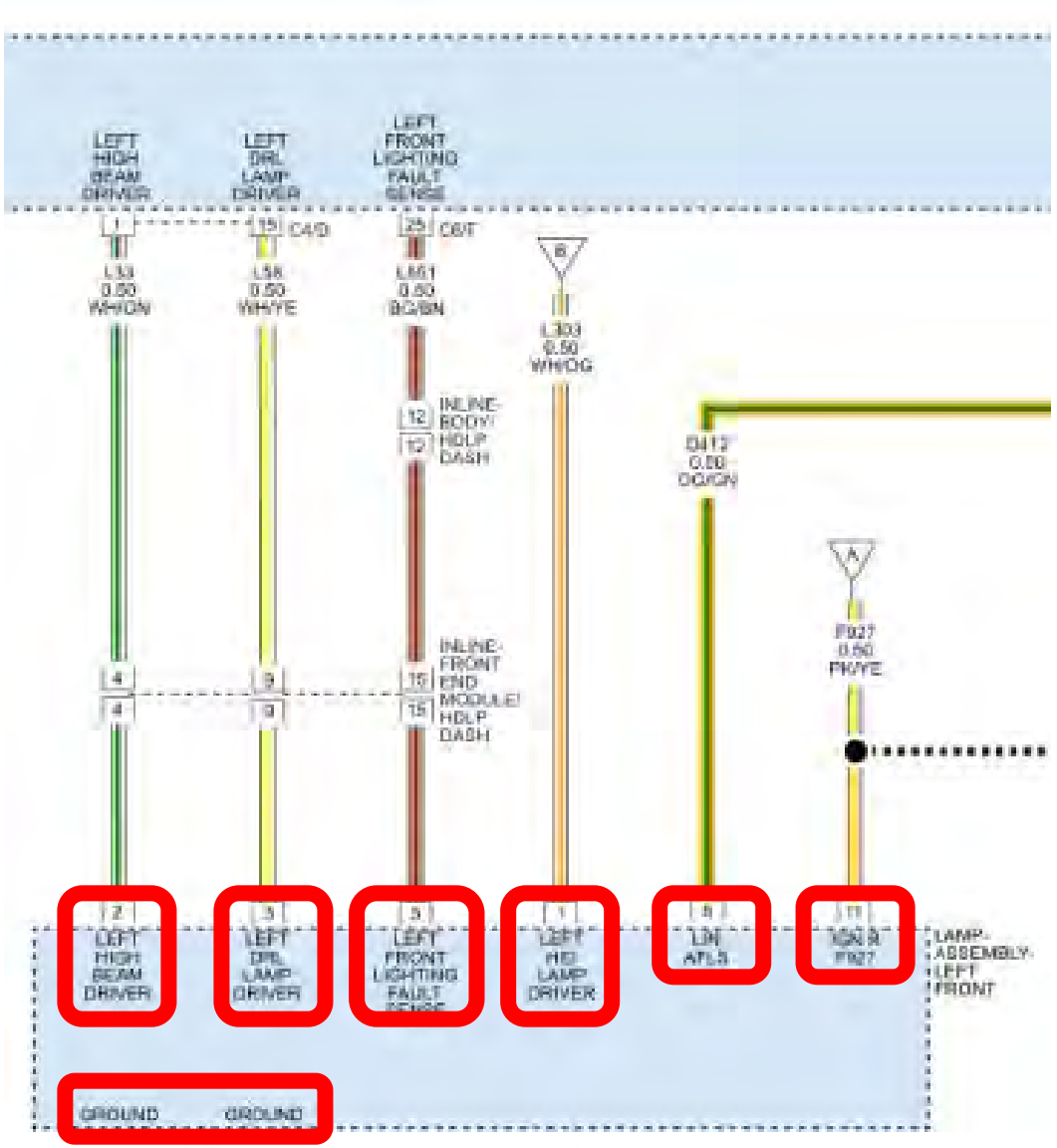

The left headlamp assembly has:

High Beam Driver
Driving Lamp Driver
A Fault Sense Wire
An HID Driver
Ignition B+ Feed
2 Grounds

And a LIN Wire…. But where does it go?

2018 Jeep Grand Cherokee

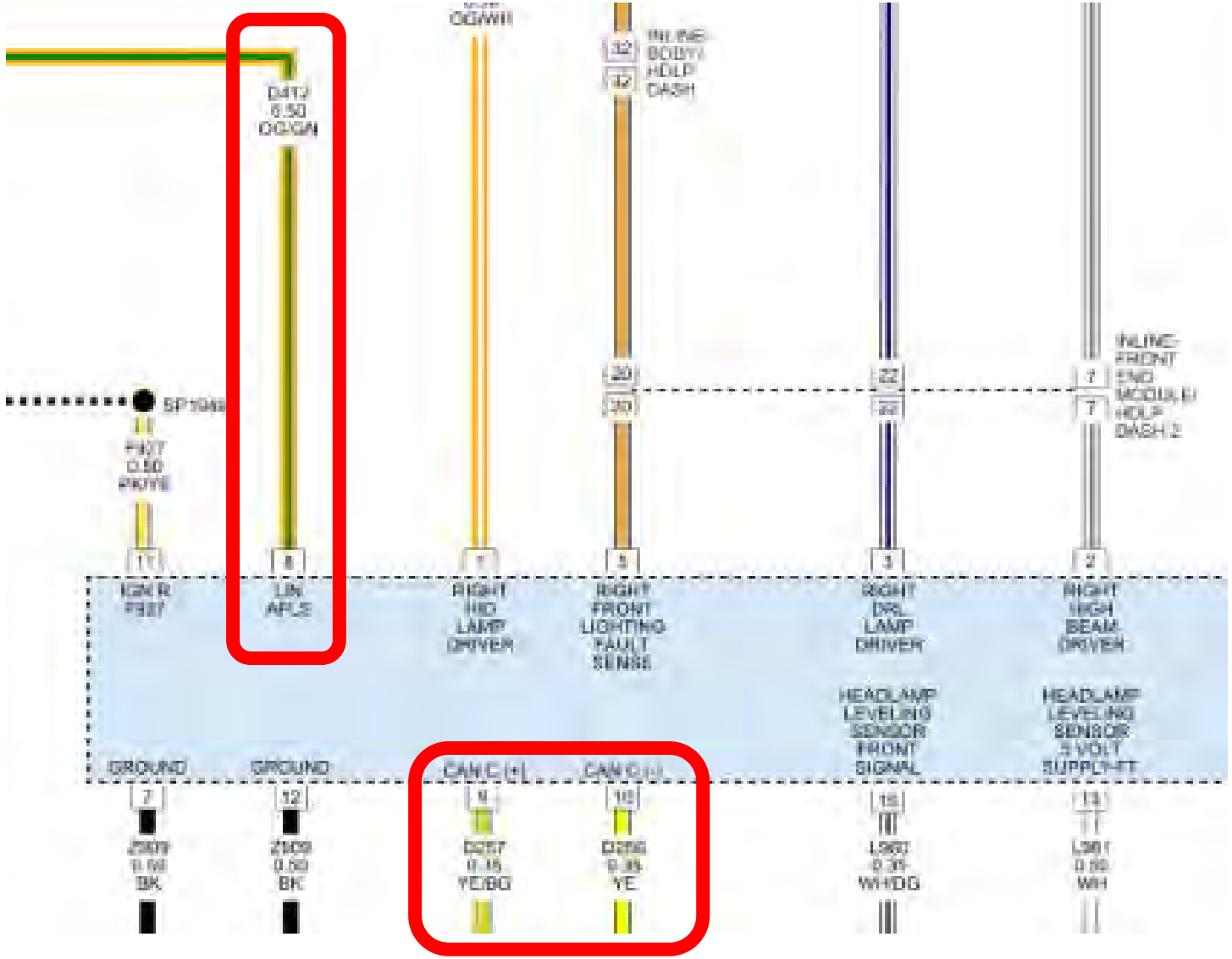

To the Right Headlight!

The Right Headlight Is More Than the Other LIN BUS Module…

It's the PRIMARY Module for the Headlight LIN BUS, it has the connection to the rest of the CAN BUS.

2018 Jeep Grand Cherokee

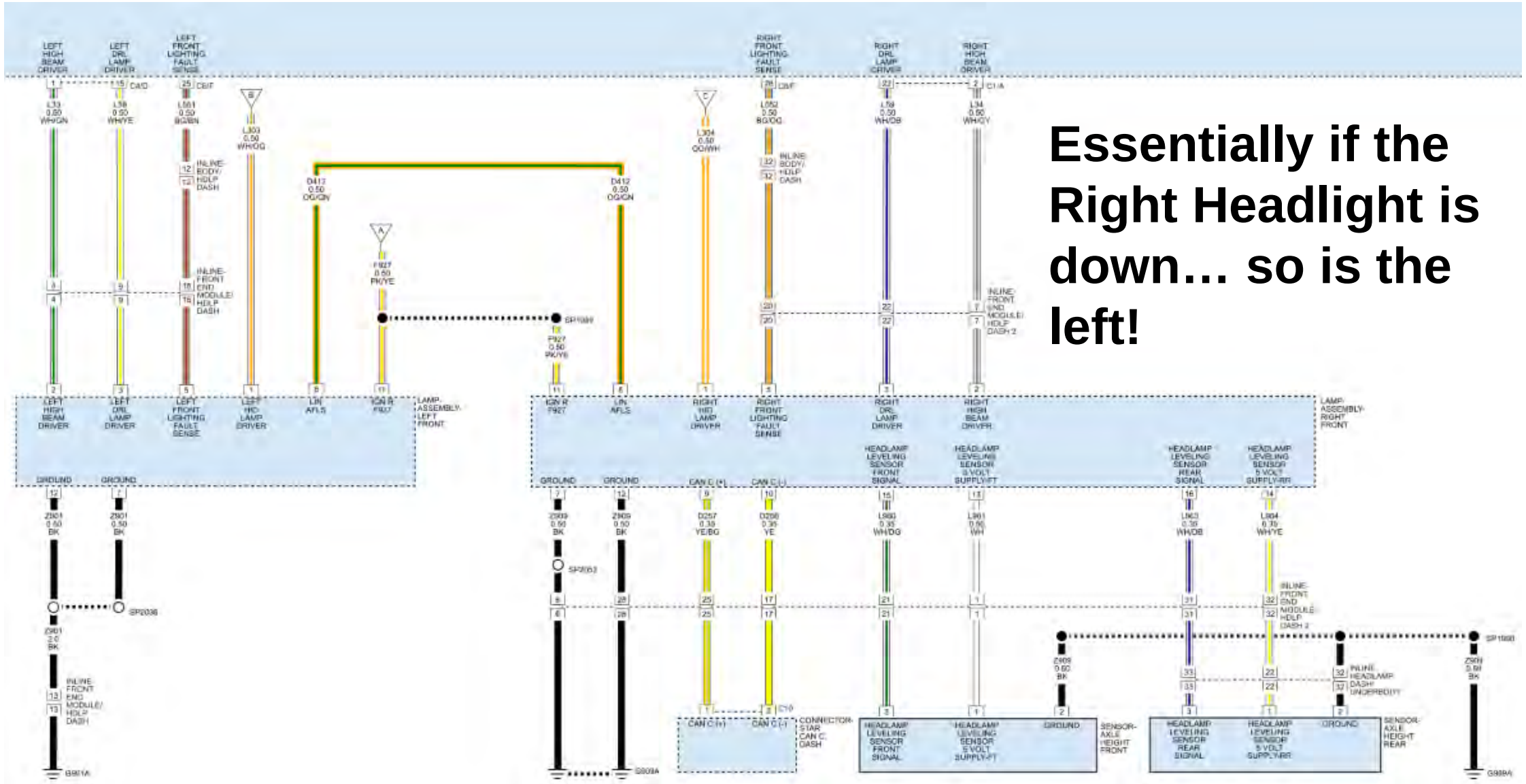

Essentially if the Right Headlight is down… so is the left!

2020 Ford Escape

Customers Complaint

Daniel states that the vehicle displays a battery/charging system warning light after approximately 10 minutes of driving, consistently occurring without fail.

The dealership has previously inspected the alternator and battery and found no issues, including tightening the alternator connection, but the warning light continues to appear. Despite their inability to resolve the issue, the dealership speculated that rodent damage might be a factor, although no evidence was found. Subsequently, a "battery low" warning illuminated on the instrument cluster.

Daniel mentions there have been no problems starting the vehicle, and it is driven daily by his son, who drove it in today. His son will be leaving for college with the vehicle next week. Before addressing any other concerns, please inspect the vehicle for signs of rodent damage. Please have a diagnostic specialist perform analysis and testing for this concern.

DTCs

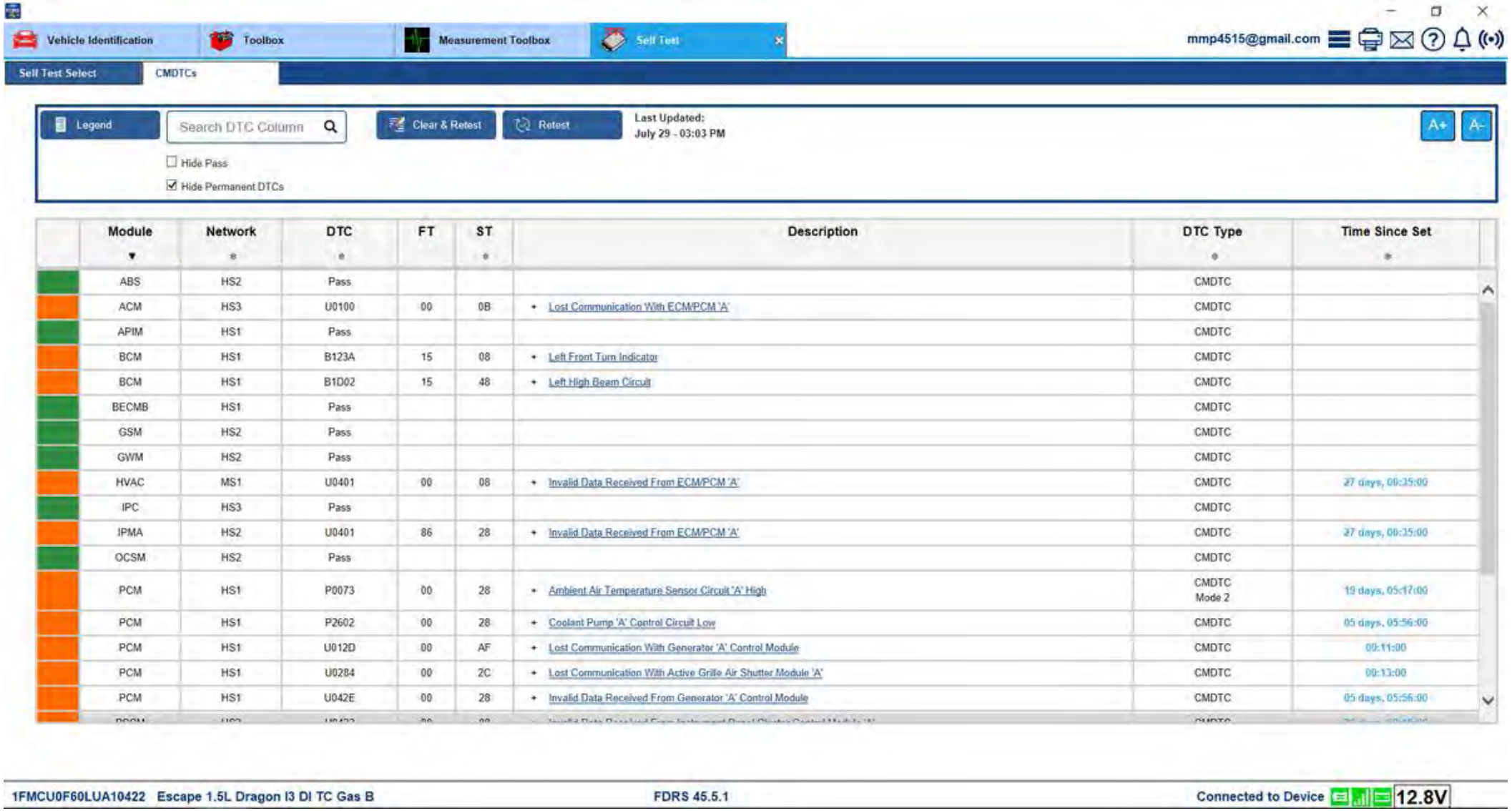

Module	Network	DTC	FT	ST	Description	DTC Type	Time Since Set
ABS	HS2	Pass				CMDTC	
ACM	HS3	U0100	00	0B	+ Lost Communication With ECM/PCM 'A'	CMDTC	
APIM	HS1	Pass				CMDTC	
BCM	HS1	B123A	15	08	+ Left Front Turn Indicator	CMDTC	
BCM	HS1	B1D02	15	48	+ Left High Beam Circuit	CMDTC	
BECMB	HS1	Pass				CMDTC	
GSM	HS2	Pass				CMDTC	
GWM	HS2	Pass				CMDTC	
HVAC	MS1	U0401	00	08	+ Invalid Data Received From ECM/PCM 'A'	CMDTC	27 days, 00:25:00
IPC	HS3	Pass				CMDTC	
IPMA	HS2	U0401	86	28	+ Invalid Data Received From ECM/PCM 'A'	CMDTC	27 days, 00:25:00
OCSM	HS2	Pass				CMDTC	
PCM	HS1	P0073	00	28	+ Ambient Air Temperature Sensor Circuit 'A' High	CMDTC Mode 2	19 days, 05:17:00
PCM	HS1	P2602	00	28	+ Coolant Pump 'A' Control Circuit Low	CMDTC	05 days, 05:56:00
PCM	HS1	U012D	00	AF	+ Lost Communication With Generator 'A' Control Module	CMDTC	00:11:00
PCM	HS1	U0284	00	2C	+ Lost Communication With Active Grille Air Shutter Module 'A'	CMDTC	00:13:00
PCM	HS1	U042E	00	28	+ Invalid Data Received From Generator 'A' Control Module	CMDTC	05 days, 05:56:00

DTCs Continued

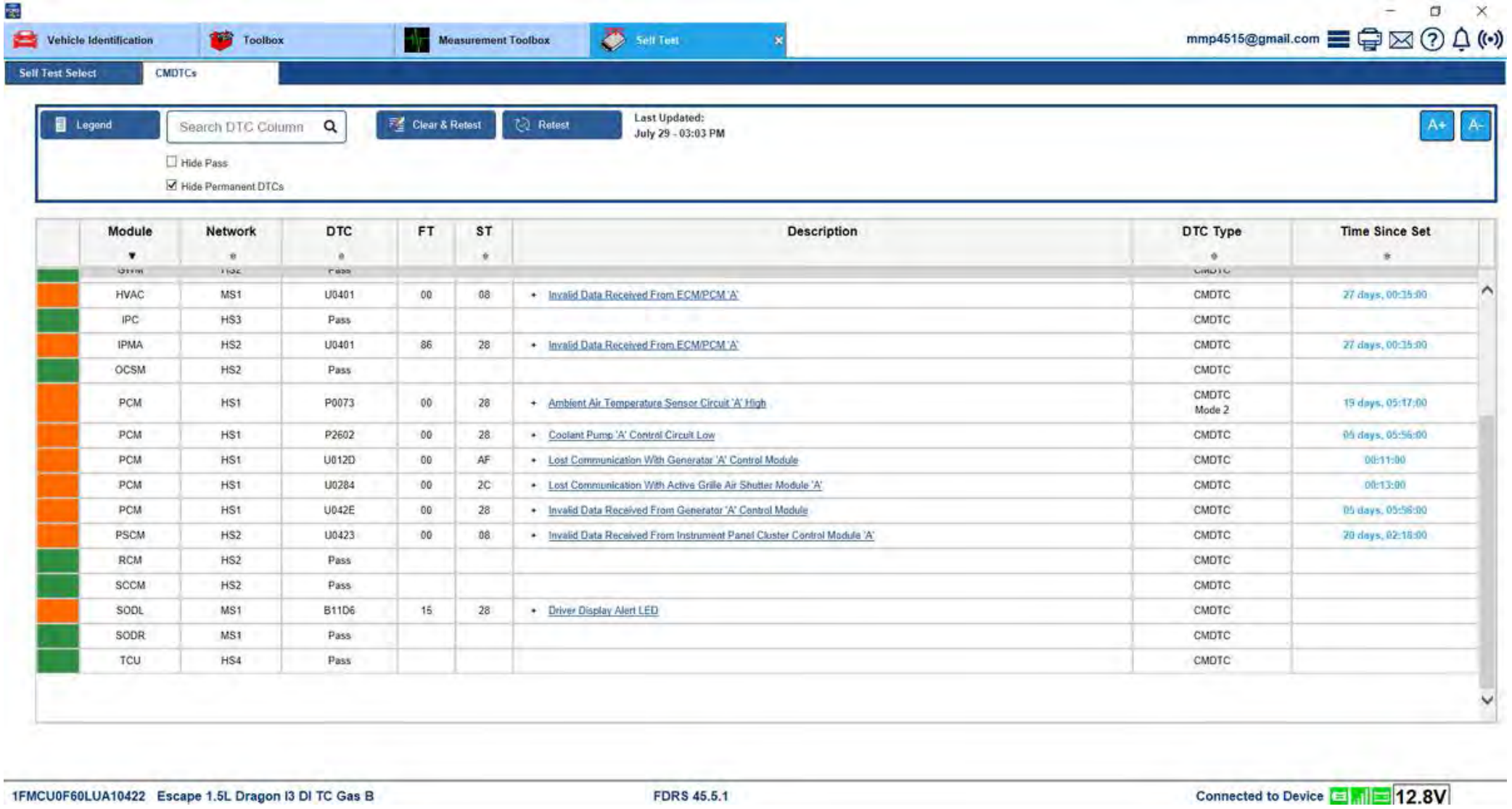

Initial Analysis & Concern Confirmation

- 10 minutes of driving before lights or warnings start
- Possible rodent damage - unconfirmed
- Multiple DTC in multiple modules for loss of comm with generator “A” module
- Multiple loss of communication with active grille shutter, front lighting controls & ambient temperature

Wiring Diagrams

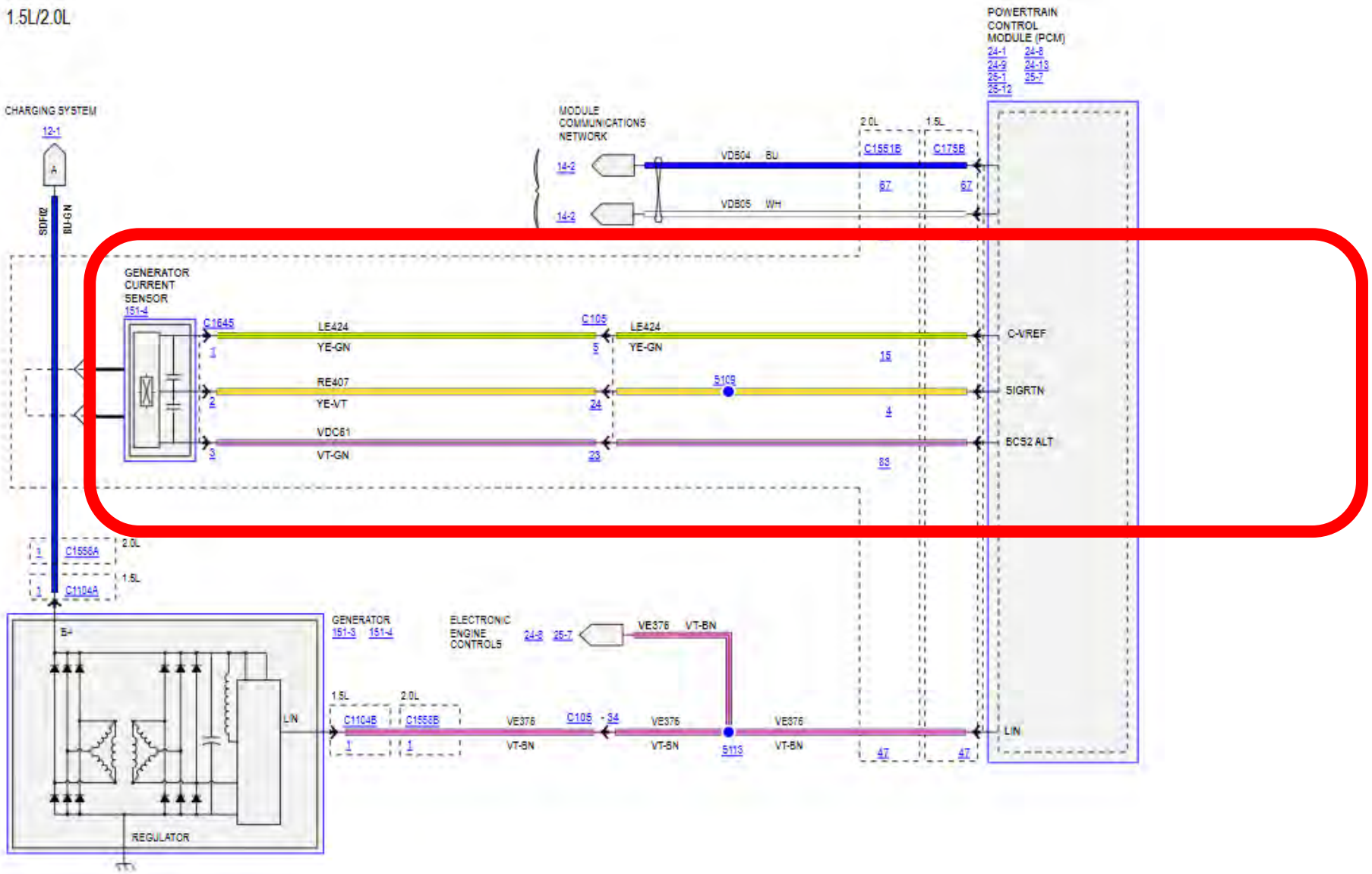

Wiring Diagrams

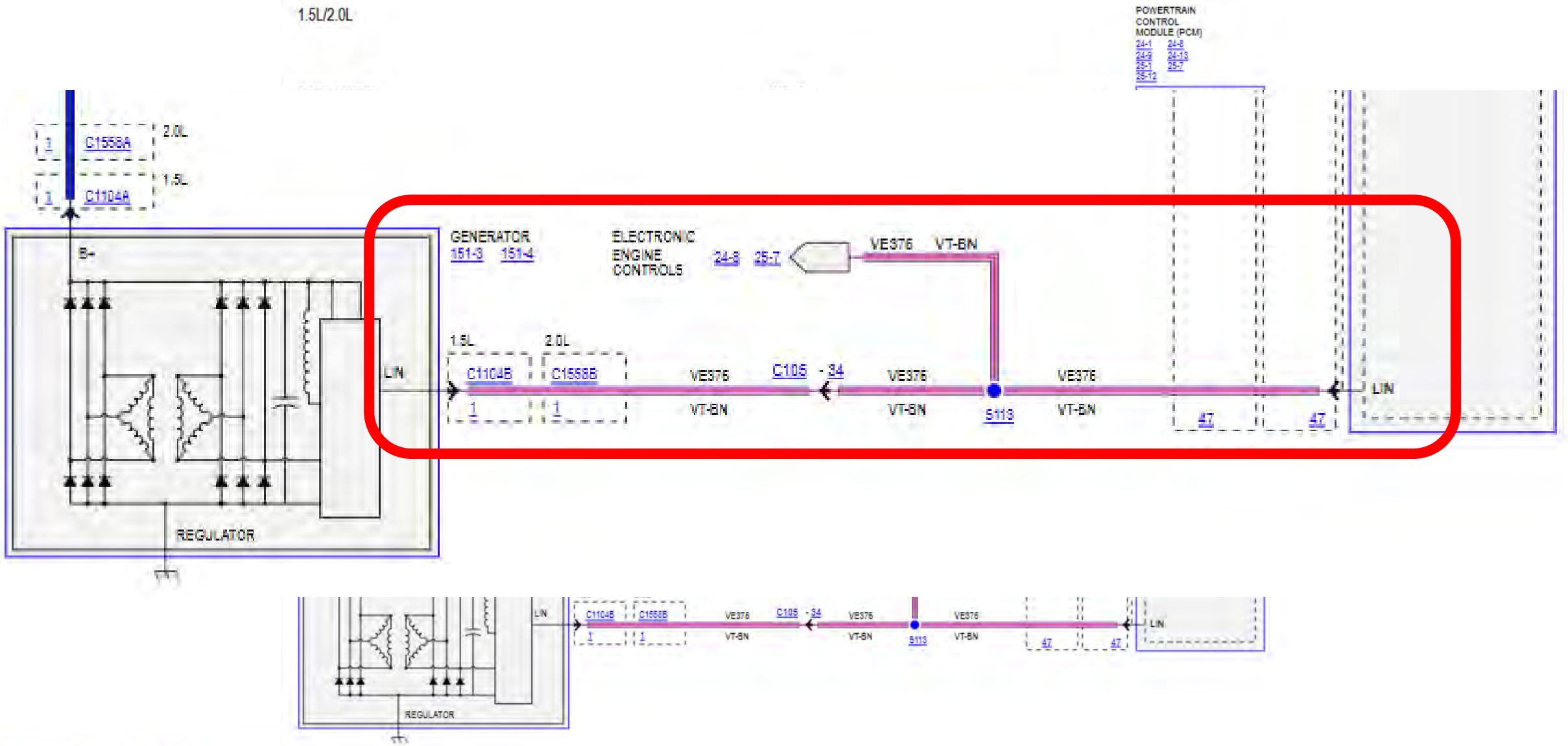

Wiring Diagrams

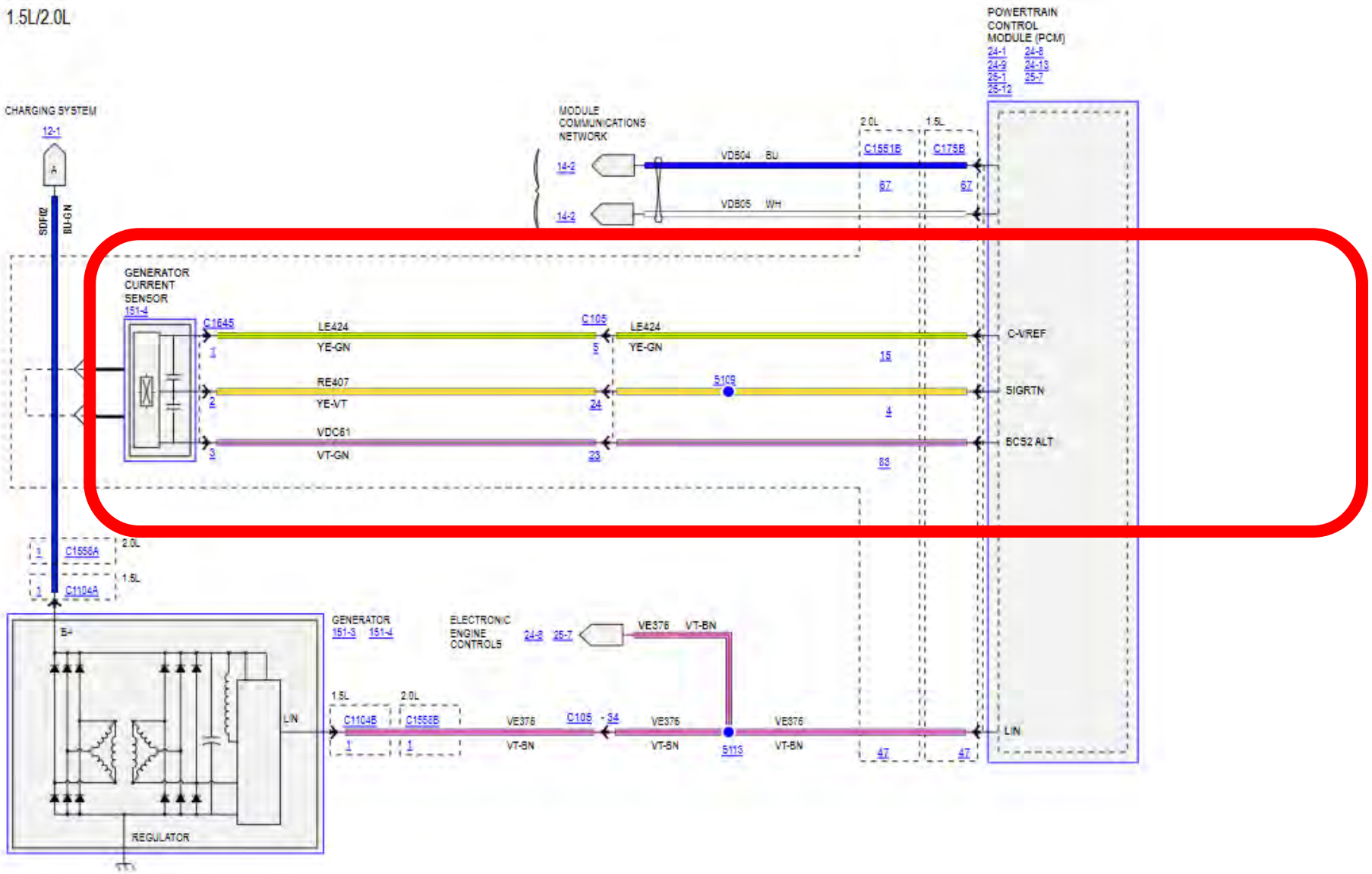

Wiring Diagrams Continued

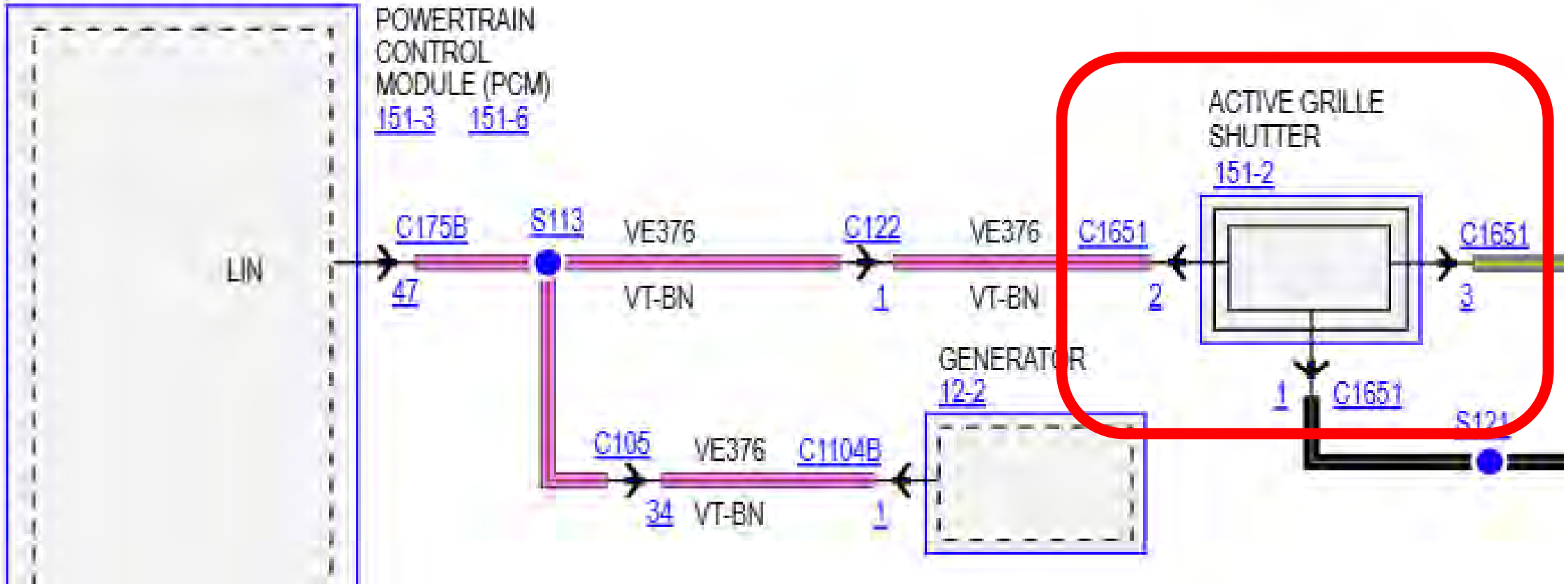

Completed Repair

System Scanned(18)

System	Status/DTC
PCM(Powertrain control module)	0
ABS(Anti-lock brake system)	0
RCM(Restraint control module)	0
IPC(Instrument panel control module)	0
ACM(Audio control module)	1
APIM(Accessory protocol interface module)	0
BECMB(Battery energy control module B)	0
BdyCM(Body control module)	0
GSM(Gear shift module)	0
GWM(Gateway module A)	0
HVAC(Heating ventilation air conditioning)	0
IPMA(Image processing module A)	0
OCS(Occupant classification system module)	0
PSCM(Power steering control module)	0
SCCM(Steering column control module)	0
SODL(Side obstacle detection control module - left)	0
SODR(Side obstacle detection control module - right)	0
TCU(Telematic control unit)	0

Most Bus

MOST (Media Oriented Systems Transport) is a **high-speed multimedia network** used in vehicles to transmit **audio, video, voice, and control data** between infotainment components.

Basic Operational Flow Continuous Data Stream:

- A master node generates a **clock-synchronous frame stream**.
- This stream loops continuously around the ring.
- All nodes receive the same stream at the same time.

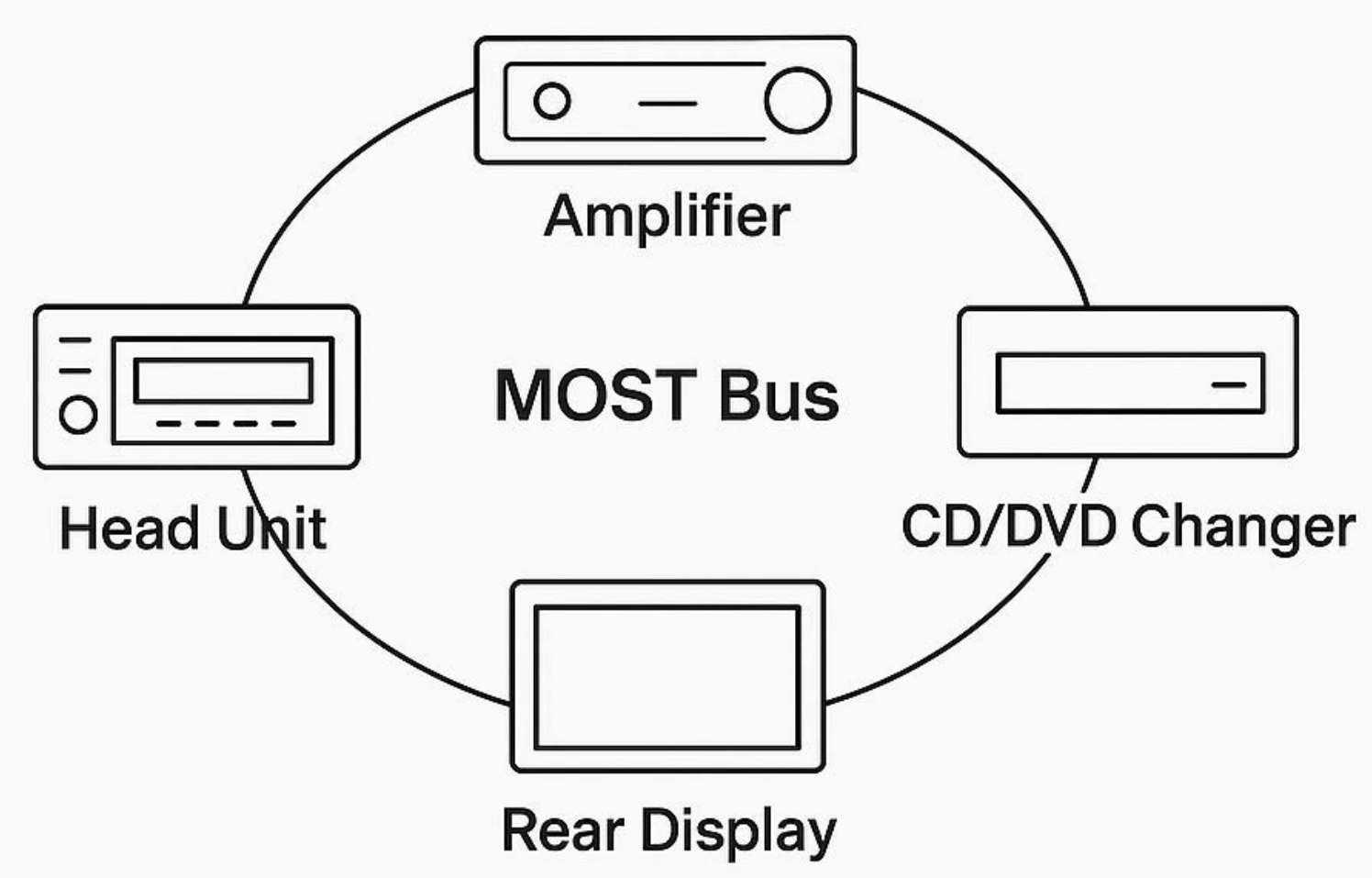

Common MOST Network Architectures

Ring Topology - A closed-loop structure where each node forwards data to the next; failure in one node or connection typically breaks the entire system unless redundancy is built in.

Daisy Chain Topology - A linear series of nodes where each device is connected to the next in sequence; simpler and cheaper but lacks fault tolerance — a break disconnects all downstream nodes.

Dual Ring Topology - A redundant ring with two parallel loops (primary and secondary) allowing data to reroute in case of a failure, providing high reliability and continuity in critical systems.

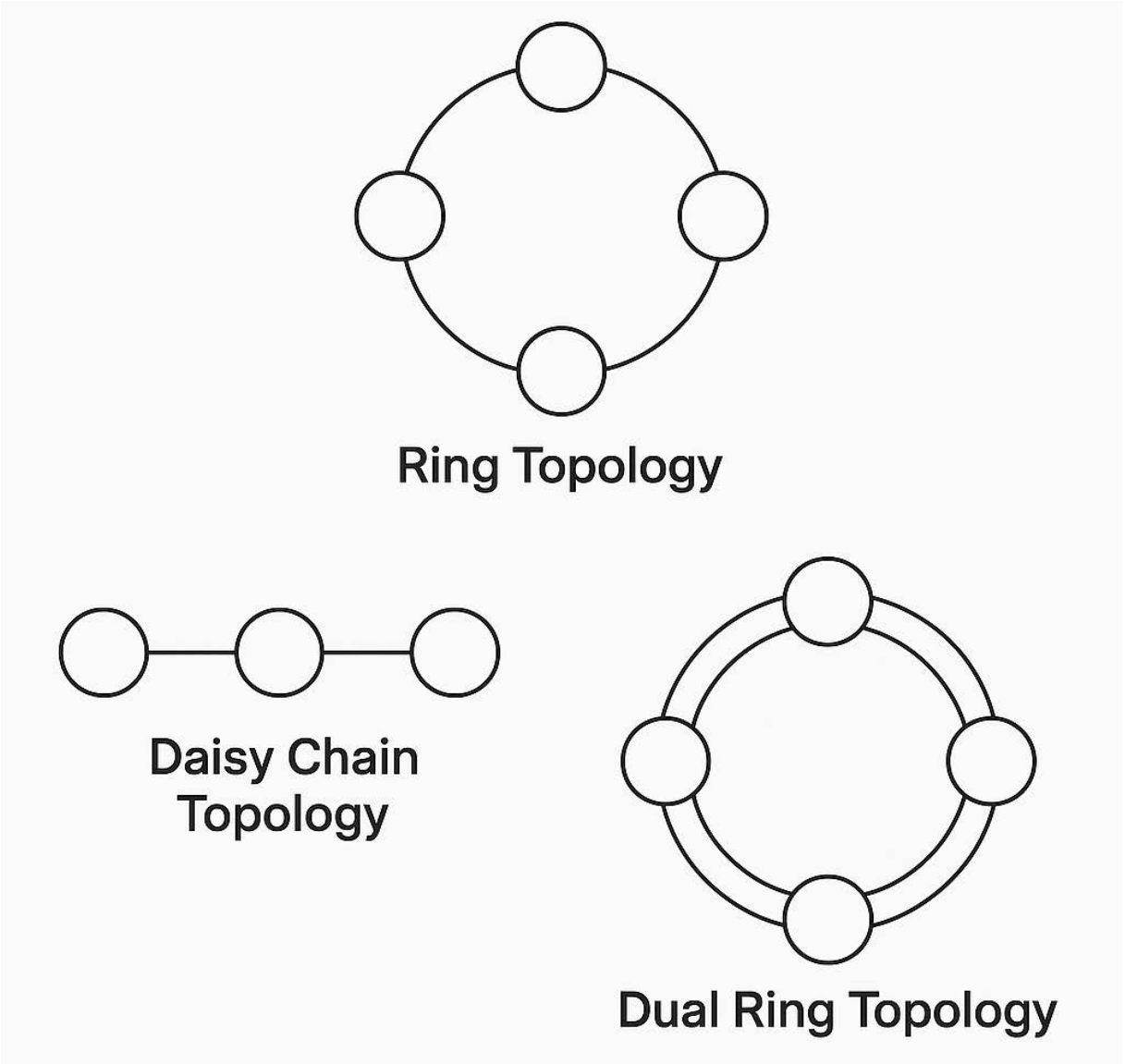

MOST Network Basics

Generation	Medium	Speed
MOST25	Plastic Optical Fiber (POF)	25 Mbps
MOST50	Dual POF or coax	50 Mbps
MOST150	Coax, UTP, or POF	150 Mbps

Failure in any node USUALLY can break the ring.

Requires specialized loopback tools for testing by isolation.

MOST Bus Specific Tools

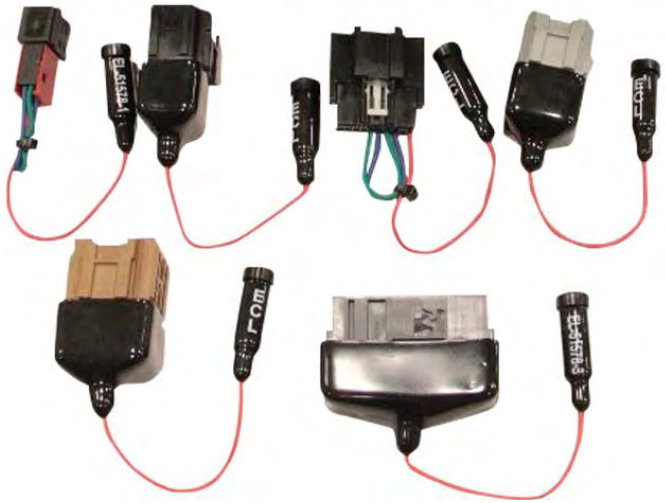

Mini-B

MOST Bus Architecture Premises

- MOST is a clock-synchronized ring network, not event-based like CAN.
- Every node receives and forwards the same data stream — no arbitration.
- This architecture allows zero-jitter audio/video streaming, but it’s fragile: one broken node or fiber can take down the entire bus unless redundancy is added.

2020 Suburban – Radio Screen Blank

2020 Chevrolet Suburban 1GNSCGKC0LR187070

“The radio screen is just black & it was replaced last week, and everything was working when they installed it. The vehicle sat over the weekend and now the screen is on, but the buttons are not working.” – Tech Notes

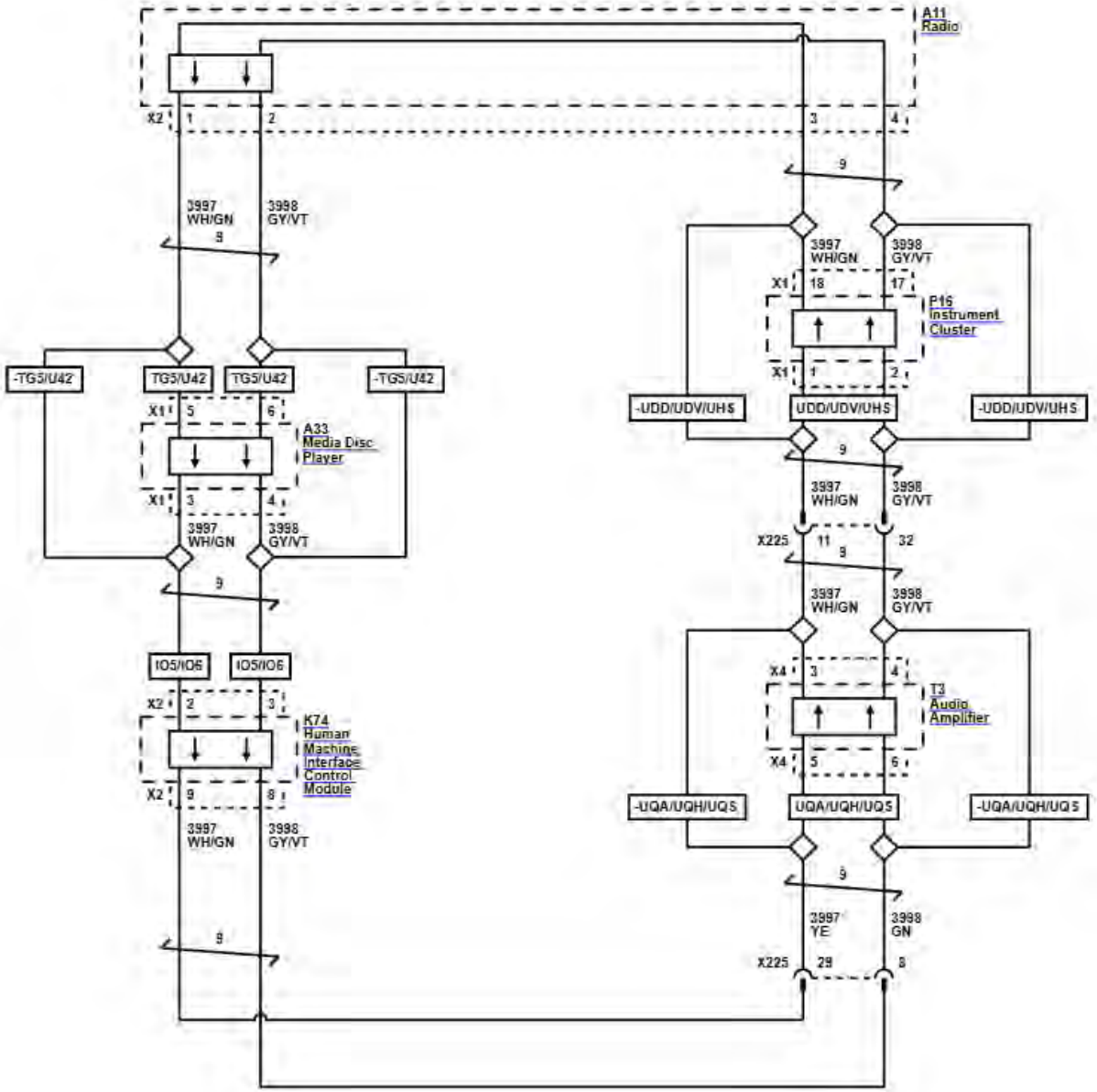

2020 Chevrolet Suburban – Pre-Scan

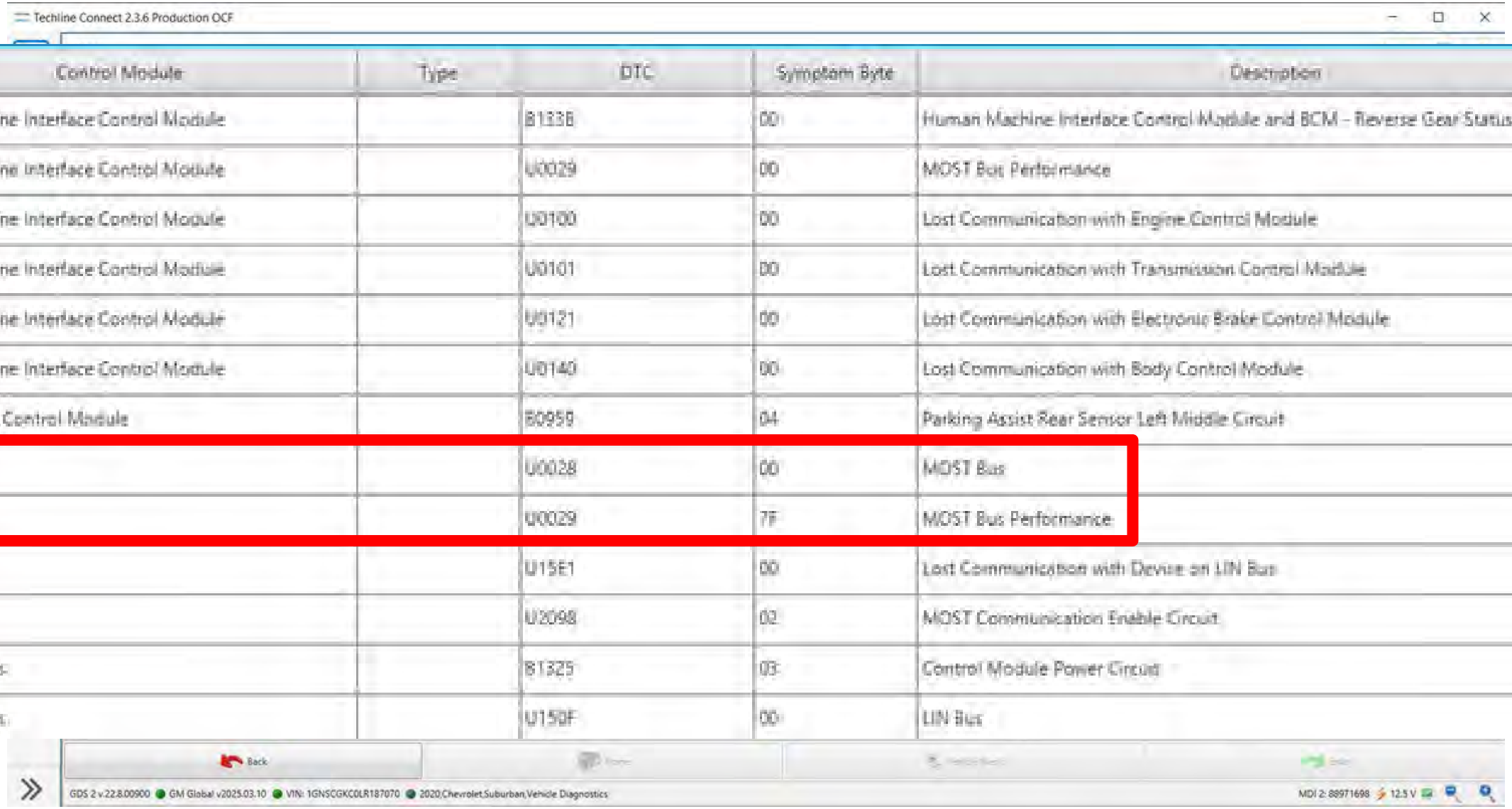

Control Module	Type	DTC	Symptom Byte	Description
Human Machine Interface Control Module		B1338	00	Human Machine Interface Control Module and BCM - Reverse Gear Status Not Plausible
Human Machine Interface Control Module		U0029	00	MOST Bus Performance
Human Machine Interface Control Module		U0100	00	Lost Communication with Engine Control Module
Human Machine Interface Control Module		U0101	00	Lost Communication with Transmission Control Module
Human Machine Interface Control Module		U0121	00	Lost Communication with Electronic Brake Control Module
Human Machine Interface Control Module		U0140	00	Lost Communication with Body Control Module
Parking Assist Control Module		B0959	04	Parking Assist Rear Sensor Left Middle Circuit
Radio		U0028	00	MOST Bus
Radio		U0029	7F	MOST Bus Performance
Radio		U15E1	00	Lost Communication with Device on LIN Bus
Radio		U2098	02	MOST Communication Enable Circuit
Radio Controls		B1325	03	Control Module Power Circuit
Radio Controls		U150F	00	LIN Bus

2020 Suburban – DTC Set Criteria

- **U0028:00 -** Can be almost any fault!
- The radio is the MOST "**Diagnostic Master**" and is default "**Node 1**"
- Each device provides 12v on the MOST control circuit. The Radio will pull the 12v to 0v for 100ms to signal all Nodes to "**wake-up**".
- When the "**MOST ring**" is incomplete the Radio will send a 0v pull down "**Wake-Up message**" every 2.5 seconds and the U0028 sets.
- The data stream will identify all talking nodes.

DTC U0028

Diagnostic Instructions

Perform the Diagnostic System Check - Vehicle prior to using this diagnostic procedure.

Review Strategy Based Diagnosis for an overview of the diagnostic approach.

Diagnostic Procedure Instructions provides an overview of each diagnostic category.

DTC Descriptor

DTC U0028 MOST Bus

For symptom byte information, refer to Symptom Byte List.

Diagnostic Fault Information

Circuit	Short to Ground	Open/High Resistance	Short to Voltage	Signal Performance
B+	U0100–U02FF, U0028 00	U0100–U02FF, U0028 00	—	—
Ignition	U0100–U02FF, U1814, U2099, U0028 00	U0100–U02FF, U0028 00	—	—
MOST Control	U2098 00, U2098 02, U0029 02	U0028 00	U2098 00, U2098 02	—
MOST Bus Serial Data (+)	U0028 00	U0028 00	U0028 00	—
MOST Bus Serial Data (-)	U0028 00	U0028 00	U0028 00	—
Ground	—	U0100–U02FF, U0028 00	—	—

2020 Suburban – Scan data PIDS

- **Number of Most breaks** is the amount of time the Radio has sent a **wake-up** without receiving it back**.**
- **Last working MOST ID of node 1** will show the first module in the ring that **communicates** back to the Radio.
- This pattern continues down the line for each node position. Typically, this is you direct view into your test plan.

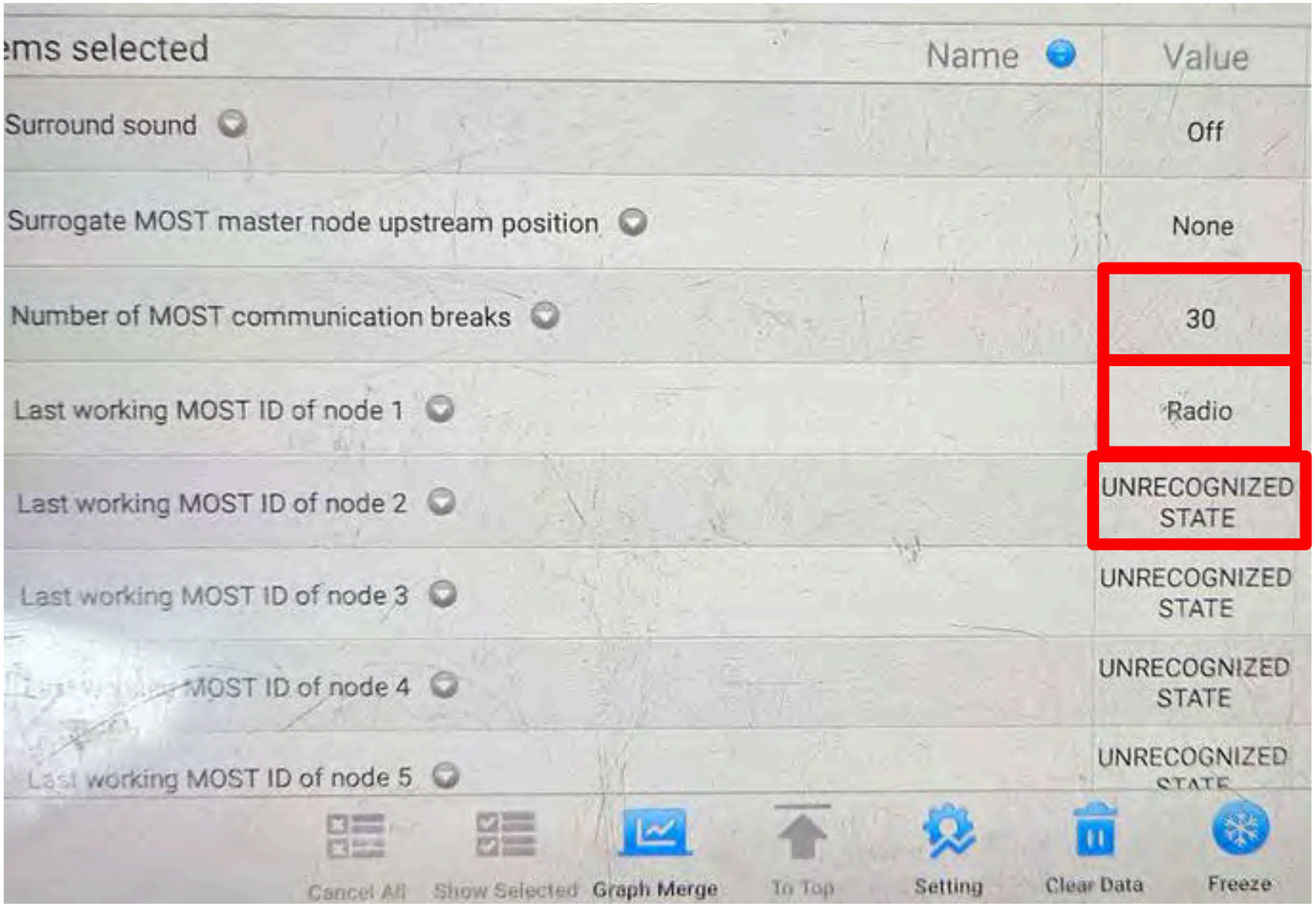

2020 Suburban – Diagram & Test Plan

Node 1

Node 2?

Node 3

Node 5?

Node 4?

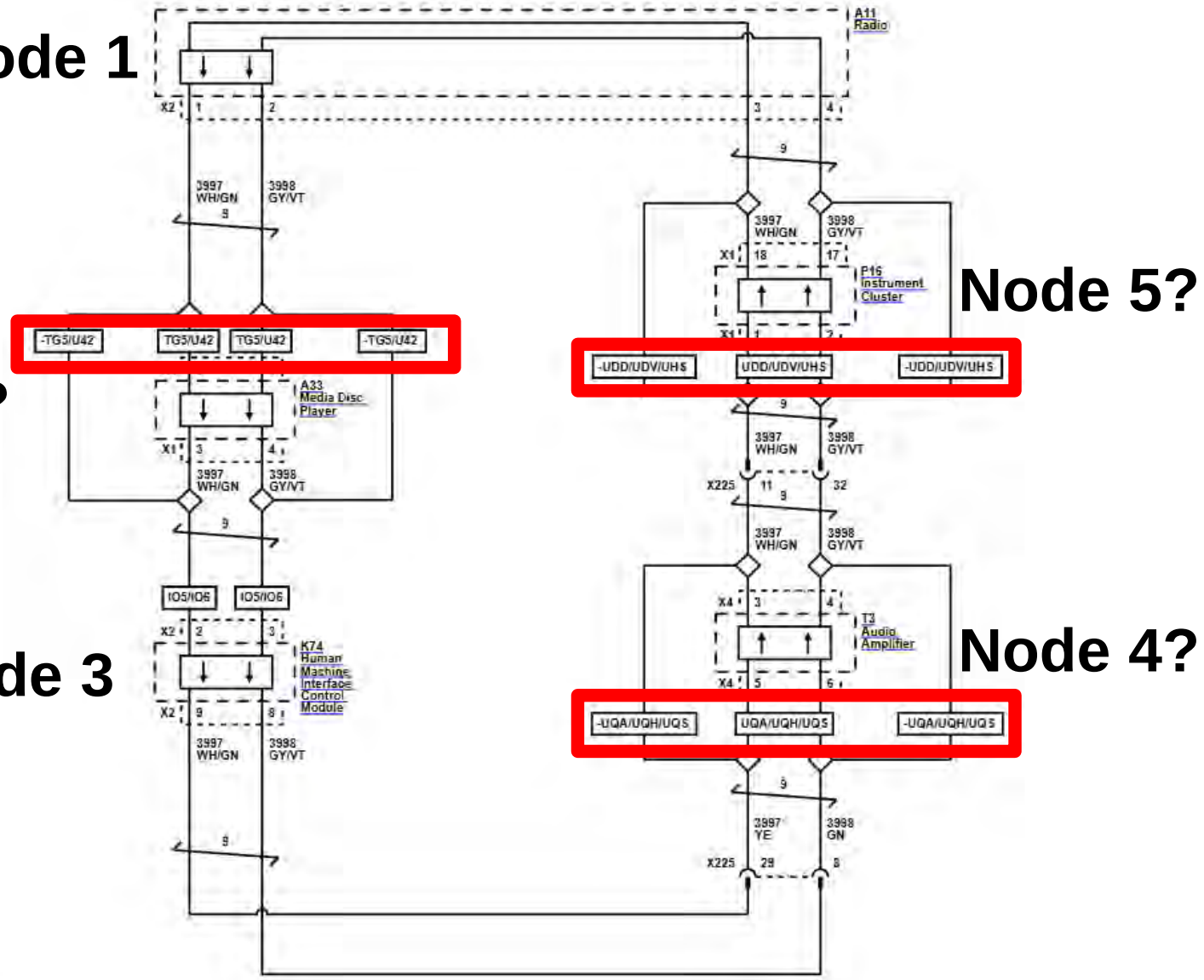

Repairlinkshop.com

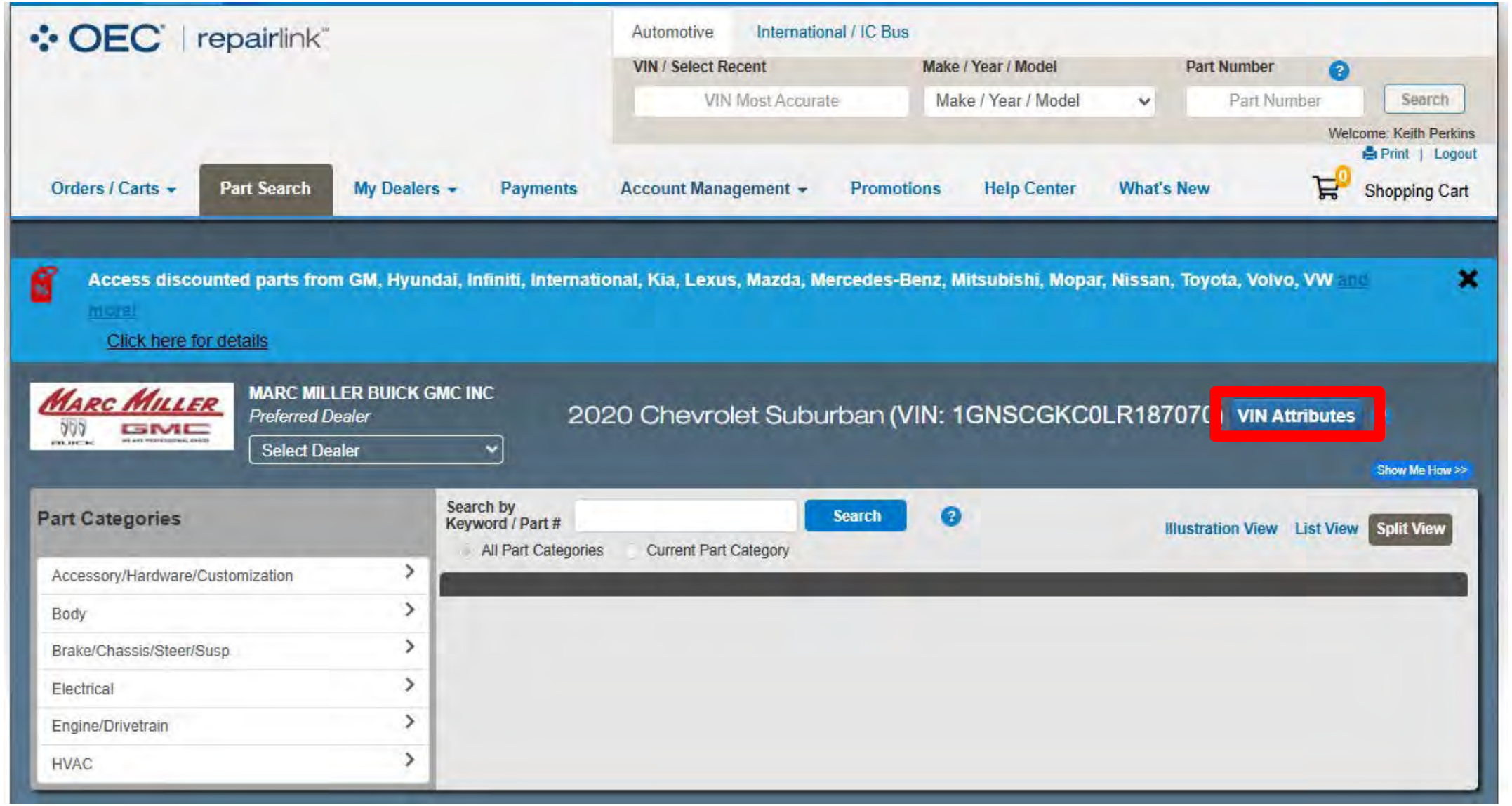

TG5/U42 &/or UDD/UDV/UHS &/or UQA/UQH/UQS

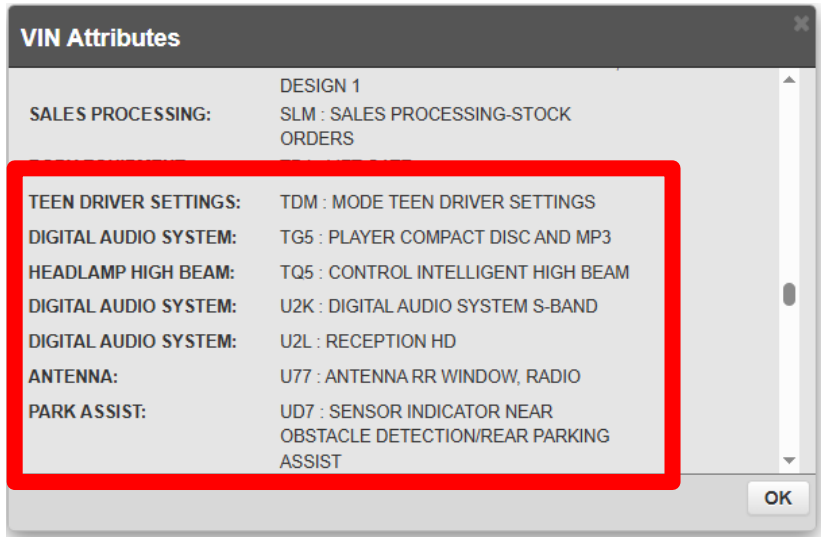

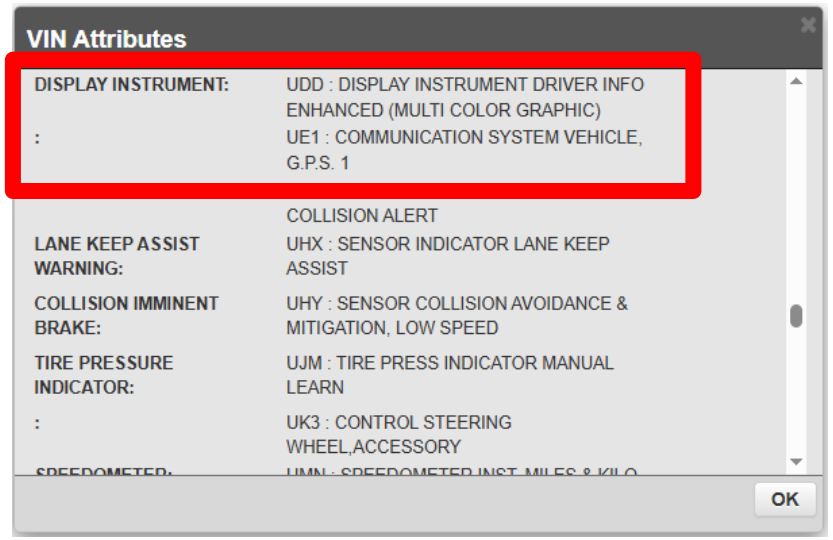

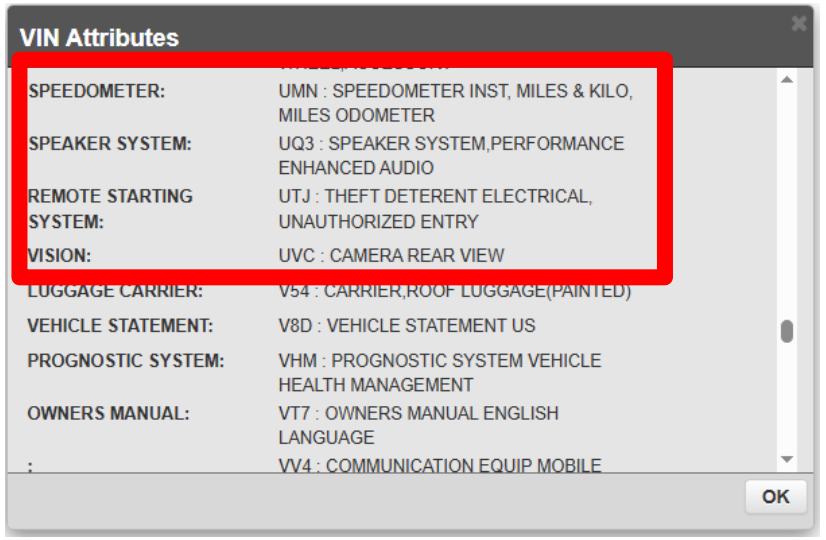

YES TG5
NO U42

YES UDD

NO UQA, UQH or UQS

2020 Suburban – Diagram & Test Plan

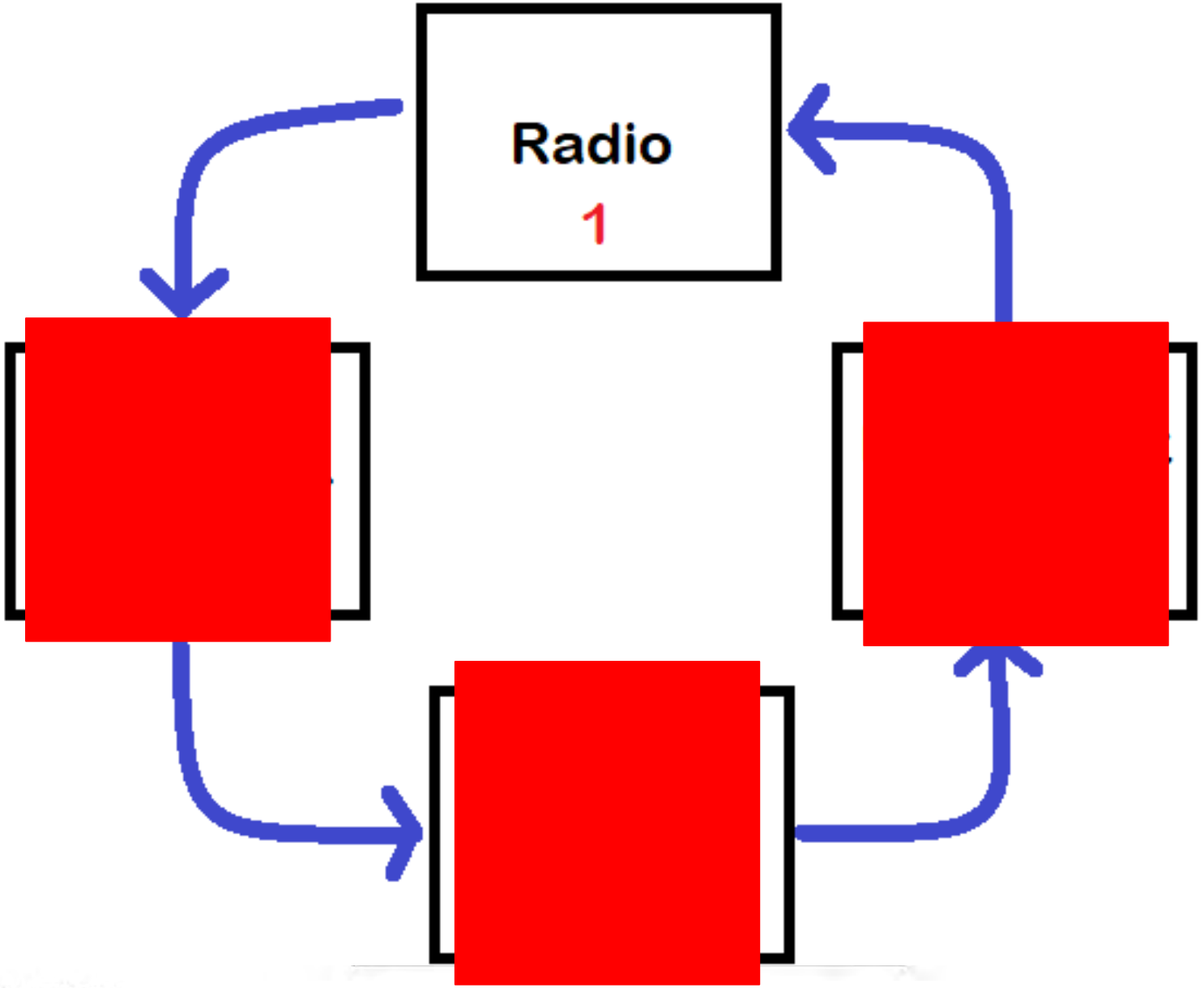

2020 Suburban – What does the data suggest?

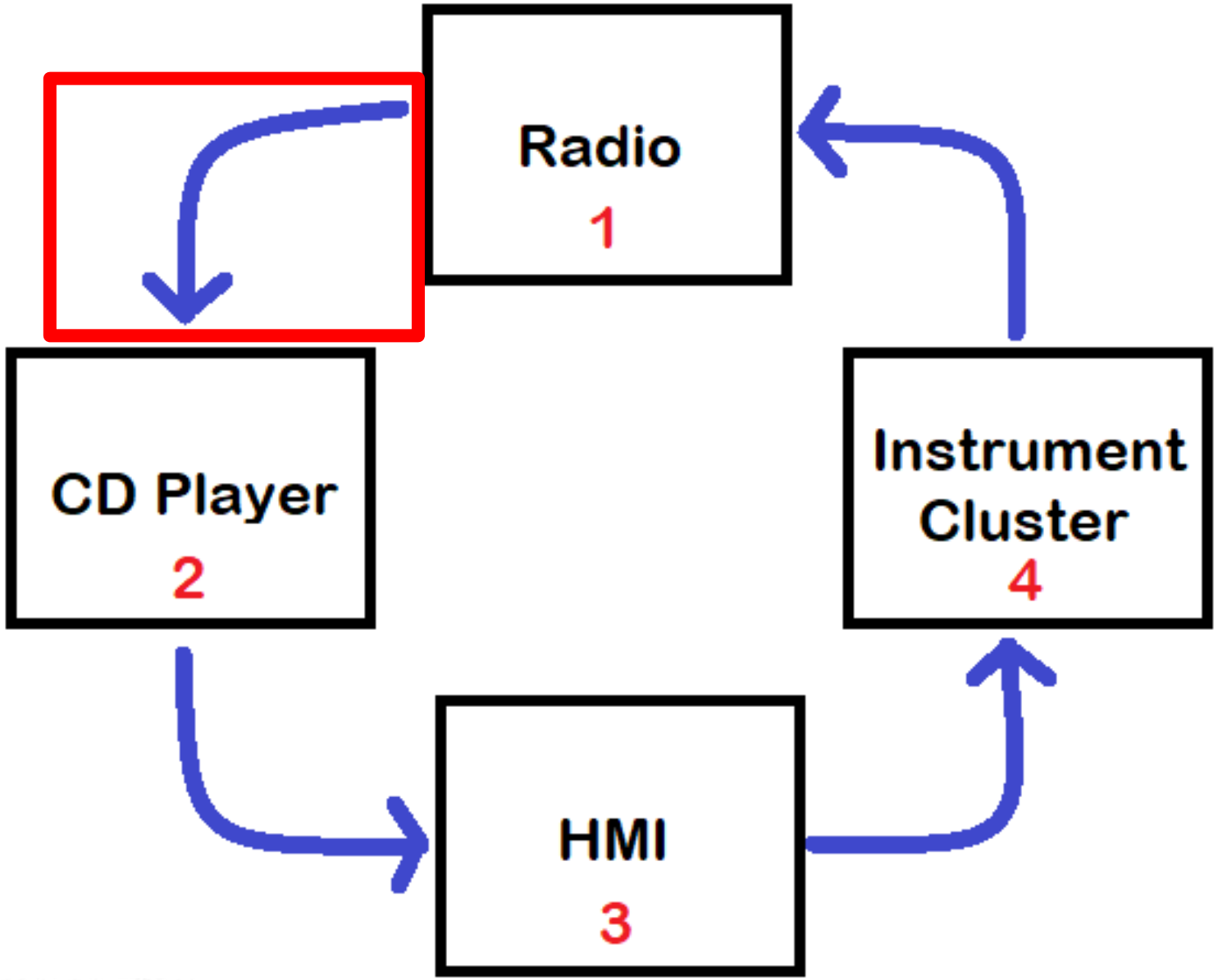

2012 Land Rover Range Rover

Customer states most of the electronics on dash are inoperative. Please diagnose and advise.

PAM – Parking Aid Module

AAM - Audio Amplifier Module

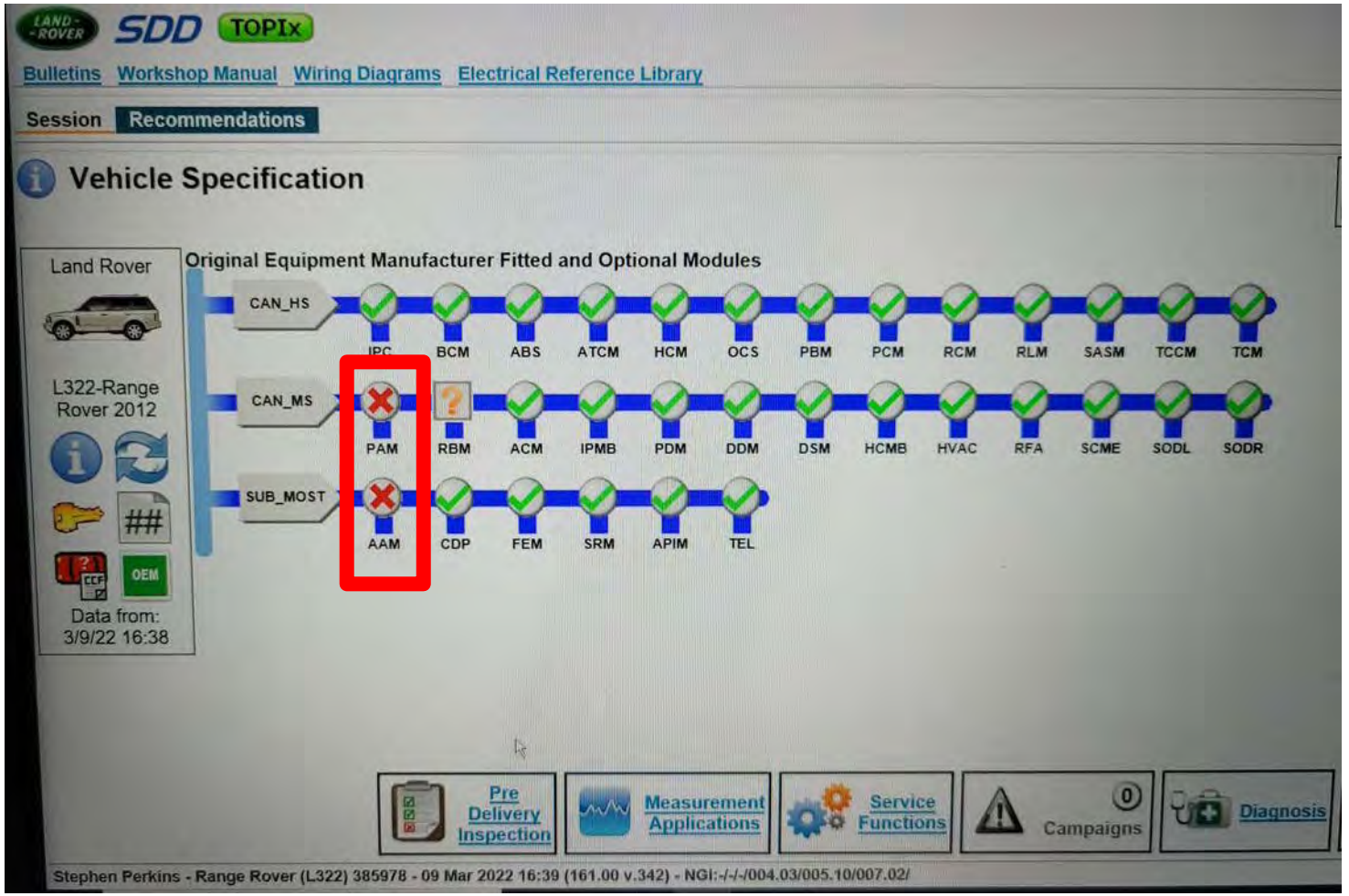

Aftermarket Scan Tool Pre-Scan

DTC Details

1. IPC (Instrument Cluster Control Module)(2 DTCs)

Codes	Description	Status
U0159-00	Lost communication with parking assist control module.	Permanent
U0184-00	Lost communication with audio unit.	Permanent

2. BCM (Body Control Module)(1 DTC)

Codes	Description	Status
U0184-00	Lost communication with audio unit.	Permanent

What does a PAM & AAM have in common?

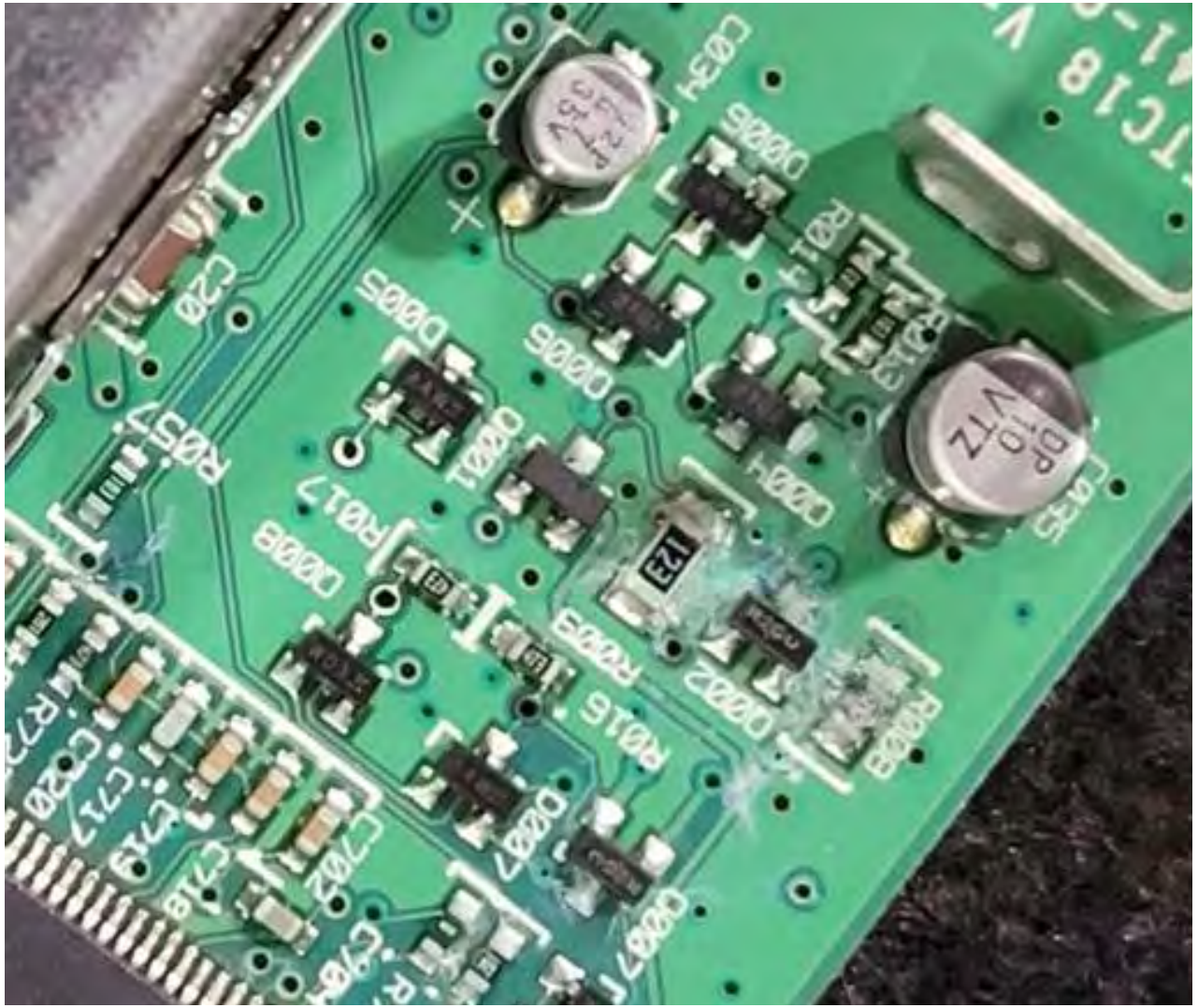

Water !!!

Replace the “Wet” Modules!

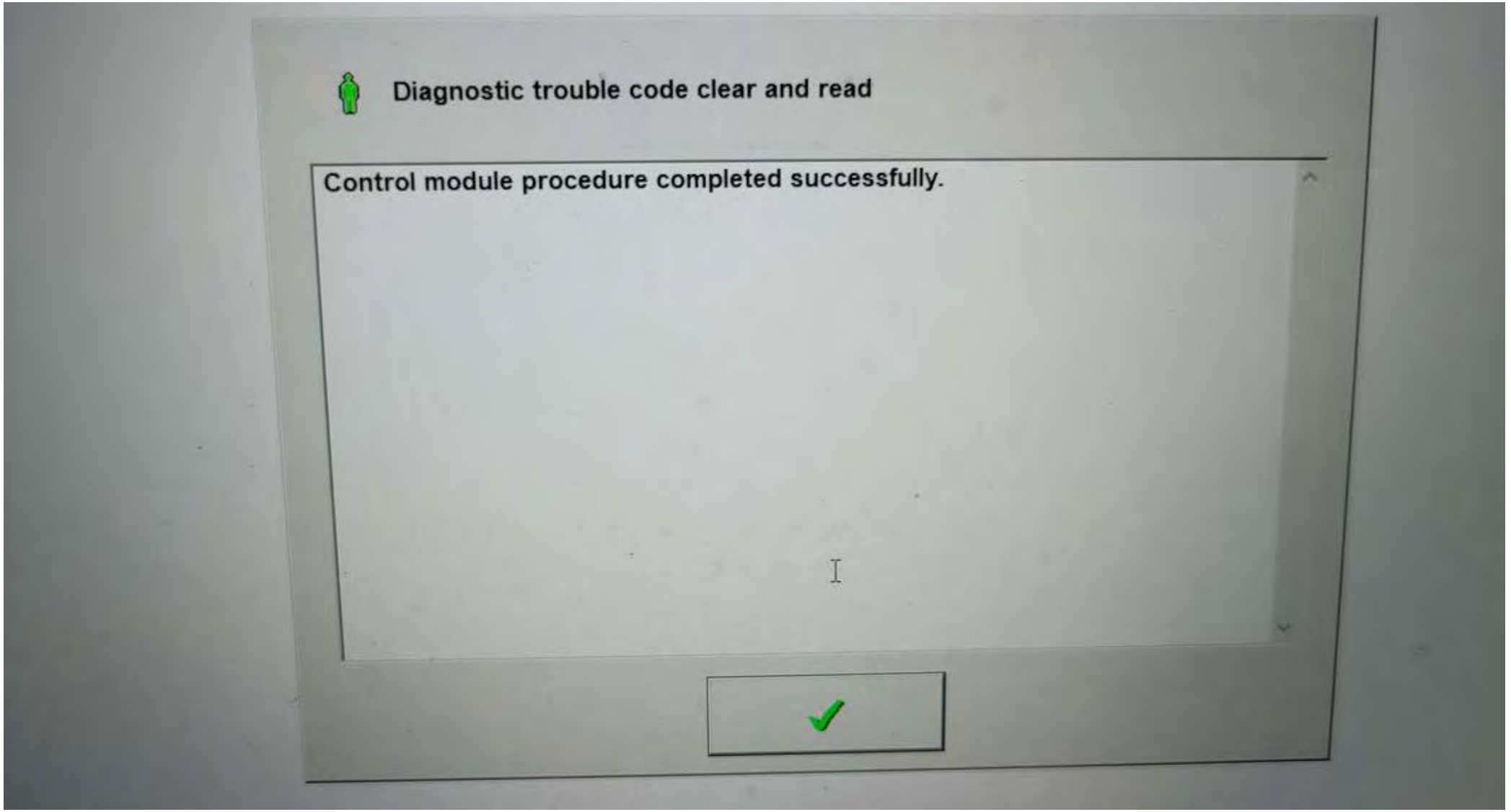

After AAM replacement Radio Screen is Blank!

In Conclusion

- Comms are just voltage... Unless it’s MOST!!!
- Wires are just wires… Unless it’s Light!!!
- Learn and understand wiring diagrams
- Document everything
- Have a process, and most importantly… USE IT!

WTI WORLDPAC Training Institute

TST SEMINARS

THANK YOU FOR ATTENDING

Be sure to complete the survey that follows this presentation

QUESTIONS?

EMAIL US ANYTIME AT WTI@WORLDPAC.COM

ENJOY THE CLASS?

PLEASE TELL YOUR FRIENDS!

Join our Facebook Group: WTI - Worldpac Training Institute

Become a Worldpac Customer Today!

Serving Professional Independent Service Centers Since 1969

Scan the QR code or follow this link:
https://speeddial.worldpac.com/#/onboarding